Spacesaver®

THE BASICS

# An Introduction to High-Density Mobile Systems

Storage Solved®

# THE SPACESAVER CONCEPT

**Spacesaver does exactly what our name implies — we save space. Lots of it.** Our High-Density Mobile Storage Systems can deliver up to three times the storage capacity of conventional filing and shelving in the same amount of floor space — and at half the cost. By mounting storage cabinets or shelving on wheeled carriages that travel on rails, wasted space created by fixed aisles can be eliminated, freeing up valuable floor space for other, more productive uses — including additional storage.

The versatility of Spacesaver High-Density Mobile Systems makes it possible to mount virtually any type of storage housing on our mobile carriages, including your existing shelving and cabinets. No other storage solution is as cost-effective or space-efficient. Regardless of size and weight, we have a mobile storage system for your needs.

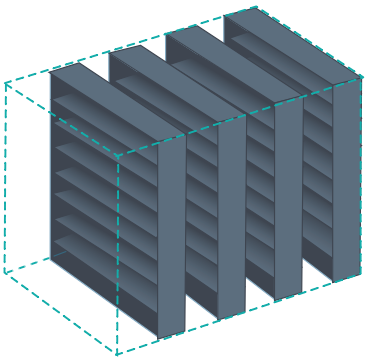

Traditional Shelving
**WASTES SPACE.**
With traditional static shelving, a large percentage of floor space is **wasted in aisles.**

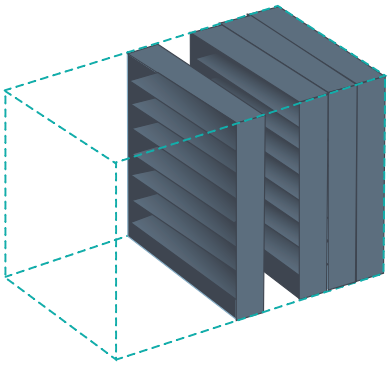

Mobile Shelving
**INCREASES SPACE.**
Mobile shelving delivers the same capacity as static shelving in **half the floor space.**

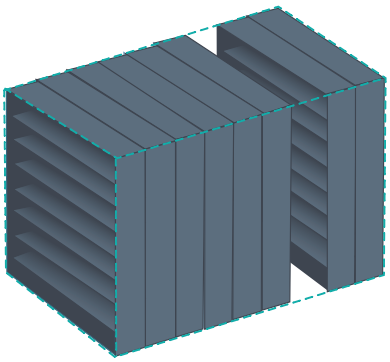

Mobile Shelving
**DOUBLES CAPACITY.**
Mobile Shelving allows you to **double the storage capacity** of your existing floor space.

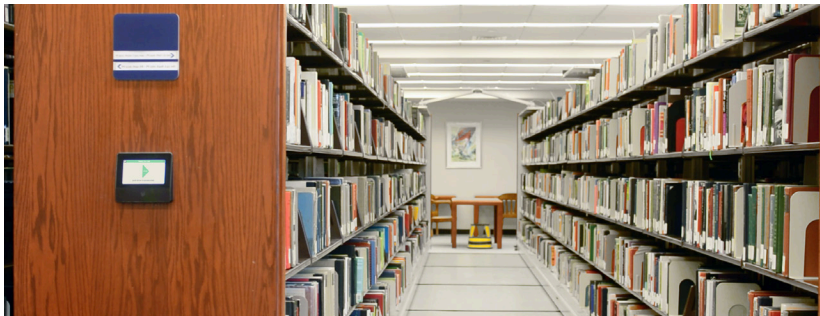

# We do what the name implies — we save space

Spacesaver offers a range of system control options. To demonstrate the flexibility of Spacesaver Mobile Storage Systems, illustrated below are three different density configurations designed for the same architectural space. Note the handling of the column obstruction in each and how density increases as we move from manual to mechanical assist and finally to powered system control.

## MANUAL MOBILE SYSTEM

Up to 16′ (4.8 m) long standard for smaller applications. *Four rows of 4′ (1.2 m) long manual units with two entry corridors.*

Total = 3,424 Nominal Shelf Feet (1,043 m)

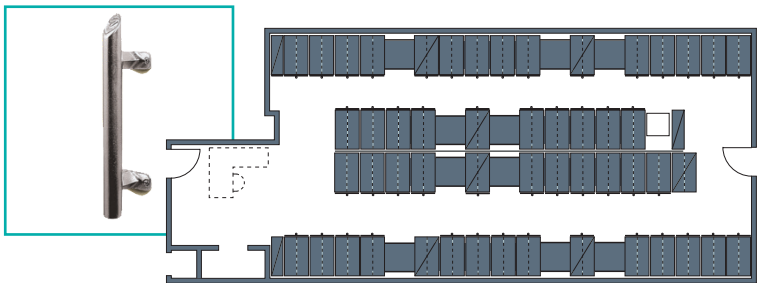

## MECHANICAL-ASSIST MOBILE SYSTEM

Up to 45′ (13.7 m) long standard. Three-spoke operator allows one pound of effort to move minimum of 4,000-pound load. *Three sections of larger capacity units and two entry corridors.*

Total = 4,152 Nominal Shelf Feet (1,265 m)

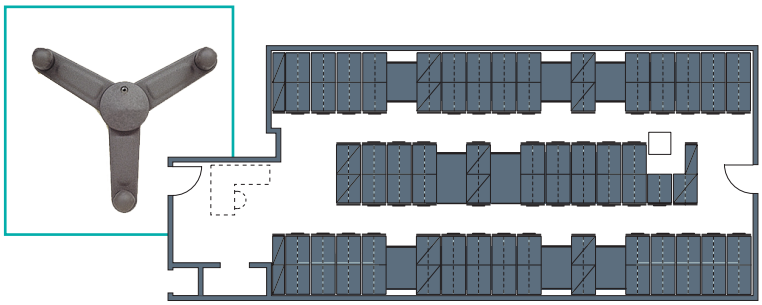

## POWERED MOBILE SYSTEM

*Up to 81′ (24.6 m) long standard (longer available). Programmable options available. Maximum density with minimum space needed for aisles.*

Total = 4,976 Nominal Shelf Feet (1,516 m)

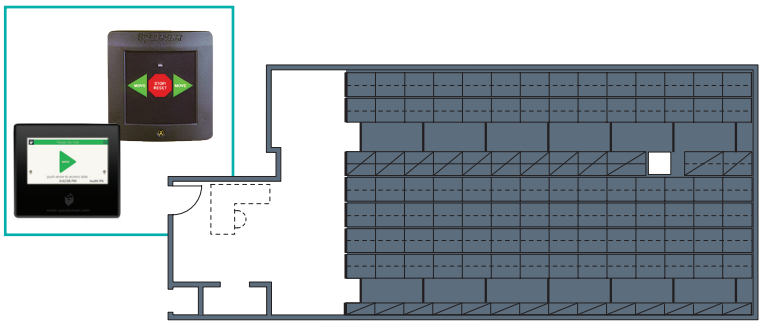

**STORE MORE OF WHAT'S IMPORTANT TO YOU**

# DESIGN CONSIDERATIONS

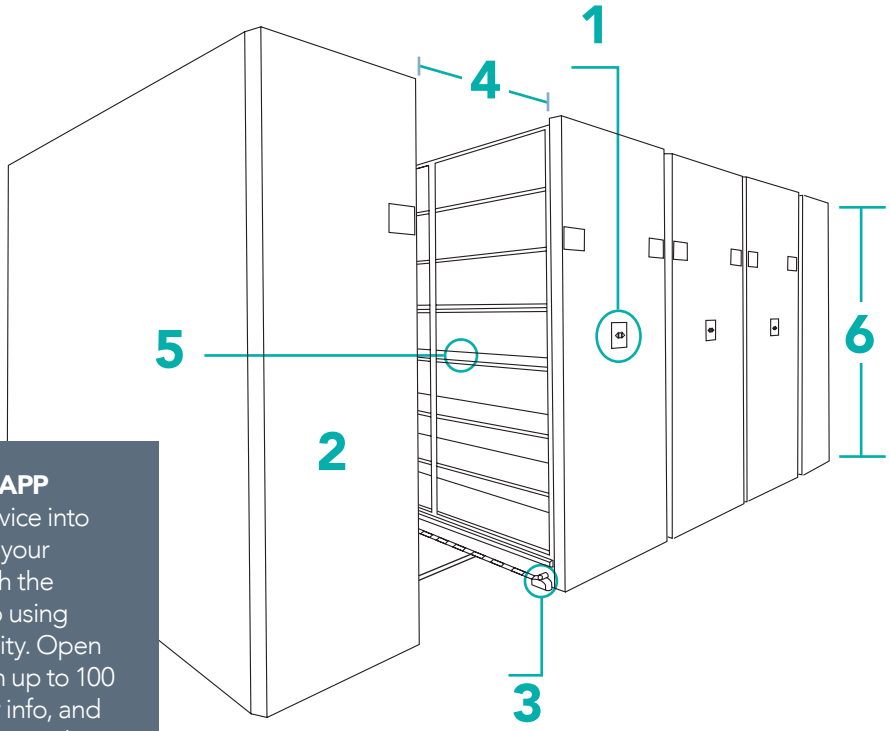


**1 CONTROLS:** We offer the choice of Manual, Mechanical-Assist, or Powered (with Touchpad, TUSC™ Control app, and Touch Technology Control) to create optimal ease-of-use.

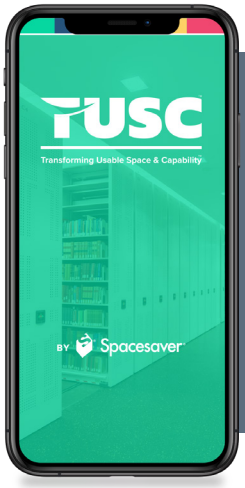


**TUSC™ CONTROL APP**
Turn your mobile device into a remote control for your powered system with the TUSC™ Control app using Bluetooth connectivity. Open and close aisles from up to 100 feet away, get safety info, and search for stored items with your Android or iOS phone or tablet.

**2 FACE PANELS:** No matter the look of your space, we can create a system to match, with extensive choice of colors and finishes in laminates, wood veneer, and steel.

**3 SAFETY OPTIONS:** Concerned about safety? We are too. That's why we offer multiple options when it comes to the use, entry, and operation of our mobile shelving systems.

**4 AISLE WIDTHS:** Flexible aisle widths are available to fit the specific needs of your business and ADA requirements.

**5 SHELVING:** We offer four-post, case-type, cantilever, and wide-span shelving that is designed to integrate with our systems, although they are designed to accommodate virtually any kind of new or existing shelving, cabinets, or other storage housing.

**6 HEIGHTS.** Similar to aisle widths, our systems can be created with flexible shelving heights to meet your needs.

## WANT TO FIND OUT MORE ABOUT HOW MOBILE SYSTEMS COULD INCREASE STORAGE FOR YOU?

Contact us for a complimentary on-site space assessment.

Spacesaver®

Spacesaver Corporation
1450 Janesville Avenue
Fort Atkinson, WI 53538-2798
800.492.3434
www.spacesaver.com

©2019 Spacesaver Corporation. Spacesaver is a subsidiary of KI. All Rights Reserved.
Litho in USA. SSC/DEL MobileShelvingBasics_0719_broch_PRD