# Mail Center Specification Guide

EFFECTIVE 9.1.14

HAMILTON
CASEWORK SOLUTIONS

## Hamilton Casework Solutions

Designed to Solve Your Workspace Needs

The HAMILTON mailroom line gives designers and end-users a modular, flexible and durable alternative to built-in millwork. Manufactured from laminate and aluminum extrusions, it provides the flexibility and strength needed for rigorous applications in document processing.

HAMILTON products are designed to meet the rigorous conditions of today's work environment.

For over 50 years, HAMILTON products have been designed and manufactured to provide the very finest in modular, flexible and durable solutions for the commercial workspace.

All of our casework is backed with HAMILTON's Limited Lifetime Warranty.

CONSTRUCTION

• Product is constructed of industrial grade 40-50 lb. substrate and aluminum extrusions.

• Ideal for high traffic areas, aluminum frame consoles withstand in excess of 1,000 lbs. Aluminum frames eliminate exposed edges and protect laminate work surfaces.

• A HAMILTON exclusive, the pin cam locking system safely secures sort module at any position on the console. The system easily readjusts toward the front or back to accommodate the reach of varying personnel.

• All module and riser edges are sealed with impact-resistant PVC for durability; there are no exposed edges on our casegoods.

• Wheels are standard options for HAMILTON's Masterseries and are available on all aluminum framed consoles.

# Table of Contents


Terms and Definitions 4

Sort Modules 5

How to Specify

Product Line

Corner Consoles and Modules Guidelines 24

Freestanding Sort Modules 25

Module Accessories 28

How to Specify

Product Line

Bulk Sort 30

Product Line

Consoles 31

How to Specify

Product Line

Specialty Consoles 40

How to Specify

Product Line

Intermediate Shelf 42f

How to Specify

Product Line

Selecting Console Accessories 46

How to Specify

Product Line

Platform 49

How to Specify

Product Line

EXECUTIVE SERIES

Consoles 52

How to Specify

Product Line

Mail Stations 57

How to Specify

Product Line

Laminates 60

Green Initiatives 61

Sustainability Guidelines 62

Lifetime Guarantee Back Cover

# Terms and Definitions

The following glossary defines some of the basic components used in designing a ailCenter. Detailed dimensions and model numbers are indicated in the various sections of this price book.

## MASTERseries

SORT MODULES One to six-sections wide, 18″ to 48″ high, with or without built-in risers. Support sorting shelves in 1″ vertical increments. Sort Modules lock to the aluminum console frame and are available with closed back on the HAMILTON Priority Program. Available with open backs and optional plexi-glass display boards and doors on standard lead-time.

FREESTANDING SORT MODULES A stand-alone version of our sort modules. Three and four sections wide, 48″ to 76” high. Available in full height or with optional bottom storage space on the HAMILTON Priority Program. Available with optional doors and sliding reference shelf on standard lead-time.

SORTING SHELVES Available in three basic sizes, shelves come with full-width label channels with clear plastic covers. Shelves are available in clear, black, brown, & grey. Plastic shelves support up to 35 lbs., optional laminate shelves support up to 50 lbs., available on standard lead-time.
**Standard:** 10$^{3}/_{4}$″ x 11$^{3}/_{4}$″ for letter-size documents, literature and forms.
**Legal:** 10$^{3}/_{4}$″ x 15$^{3}/_{4}$″ for legal documents and spreadsheets.
**Oversize:** 12$^{3}/_{4}$″ x 15$^{3}/_{4}$″ for full-size overnight envelopes, computer printouts and newspapers.

READER STATION Reader Stations are sort modules with an opening to accommodate a computer monitor. Opening and binder shelf can be positioned left, right or center.

BULK SORT UNITS Units provide higher shelf clearances for sorting of larger packages. Available in desktop and freestanding units, with flat or angled shelves. Will accommodate a variety of tubs for bulk sorting large quantities of mail.

CONSOLES Used alone or to support sort modules. Available with optional half and full-depth shelves and sliding doors. Widths range from 24″ to 84″, depths between 24″ and 36″ and heights of 30″ and 36″. Ergonomically designed with clear, anodized-aluminum frame.

DUMP RIMS Securely lock to the aluminum console frame to contain mail dumped on the worksurface for sorting. Can be used on individual or ganged consoles.

INTERMEDIATE SHELVES Can be placed inside consoles with full-depth shelves or sliding doors for additional storage space. Can easily be removed and re-inserted. Are available in half and full-depths in sizes to fit all standa d-size consoles.

PLATFORMS Provide additional worksurface and clearance for machines. Lock into aluminum console frame for security. Available with optional aluminum extrusion for additional support and keyboard mounting.

## Executive Series

CONSOLES Executive Consoles are light-use tables with no aluminum extrusions and are not intended for general mail center use. Available in a basic style, with a full shelf and a full shelf with doors. Consoles with half legs and corner Consoles can be combined to form a larger desking unit.

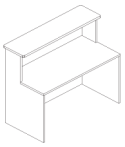

COUNTER CONSOLES Counter Consoles feature a standard console combined with a 16″ wide counter surface. Often used in reception areas, Counter Consoles are available in widths ranging from 48″ to 72″.

CREDENzAS Credenzas feature hinged doors, handles, a recessed 3″ kickplate, and interior adjustable shelving. They are also available with or without predrilled mail slots. (See Executive Mail Station for Credenza with slots.)

OVERHEAD UNITS Storing items overhead can dramatically increase available worksurface. Overhead units are available with hinged or retractable doors or even no doors at all. Optional accessories include fabric-covered tackboards and undersurface task lights.

STORAGE UNITS Lateral files a e available in two, three, and four drawer units while pedestals offer two and three drawer configurations. edestals are available in two heights, one of which permits undertable placement. Lateral files and pedestals all featu e gang locks and anti-tip mechanisms.

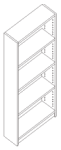

BOOKCASES Executive Series Bookcases feature extra-deep adjustable shelves to facilitate binder storage. Two widths and fi e heights combine to accommodate a variety of storage needs.

ExECUTIVE MAIL STATIONS Provide a central location for mail-drop off and collection on each floor or within each department. Not intended for heavy mail-room use. Executive console doors feature optional mail slots for outgoing mail drop-off. Laminated trim offers an executive look for front office envi onments.

# Sort Modules

## How to Specify Your Options

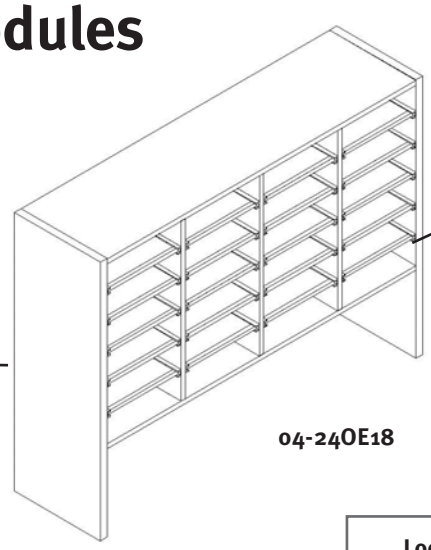


| **Riser Option** | Pass Through |
|---|---|
| Closed | P03 = 3″ Open |
| E03 = 3″ Riser | P06 = 6″ Open |
| E06 = 6″ Riser | P12 = 12″ Open |
| E12 = 12″ Riser | P18 = 18″ Open |
| E18 = 18″ Riser | Leave blank if no riser desired. |

**Locks (per door)**

| Model # | Description |
|---|---|
| T | Thumb Latch |
| K | Key Locks |

**Slot Type**
S = Standard Size
L = Legal Size
O = Oversize

Sorting Height

Riser Option

**Plexiglass Doors**
F = Front
R = Rear
B = Both

Locks

**O 3 - 3 6 P E 0 6 x F C T**

Number of Columns

**Back**
C = Closed
O = Open
P = Plexiglass

**Display Board**
x = No Board
Y = Board

Plexiglass Color

See page 60 for color codes.

**Plexiglass Color**

| Model # | Description |
|---|---|
| x | No |
| C | Clear |
| S | Smoke |

## Notes

1. To calculate the sorting inches per column, take the total height of the unit, subtract any riser, subtract 2″ for the top and bottom of the unit. Example: S5-30E6; 36 (total height) - 6 (riser) - 2 (top & bottom) = 28 sorting inches per column x 5 columns = 140 total sorting inches.

2. Shelf supports are adjustable on 1″ increments.

3. Modules with sorting heights of 18″, 24″ and 30″ include fi e shelves per column, providing a total of six mail slots per column. Modules with sorting heights of 36″, 42″ and 48″ include seven shelves per column, providing a total of eight mail slots per column. Example: An S5-30 has fi e shelves for each of the fi e columns for a total of 25 shelves. Six slots for each of the fi e columns equal a total of 30 mail slots.

4. If a module has a riser, use the sorting height only to calculate the number of shelves included. Example:S5-30E6 has a total height of 36″ but a sorting height of only 30″. Five shelves are included with this module.

5. Additional shelves may be ordered if more slots are required. Shelves may also be deleted if fewer slots are required.

6. Inside Column Dimensions (between shelf supports)

| Size | Inside Width | Inside Depth |
|---|---|---|
| Standard | 10 1/8″ | 12″ |
| Legal | 10 1/8″ | 16″ |
| Oversize | 12 1/8″ | 16″ |

7. Modules with 6″ risers that are 54″ or more in width have a center riser leg. All modules with 12″ or 18″ risers feature a 2″ front fascia on the riser. (Clearance = riser height - 2″). All modules with 12″ or 18″ open risers have a 2″ fascia on the riser front and back. Open-back modules with no riser have a 2″ fascia across the upper rear. Open-back modules must have closed-back risers and modules with open-back risers must be closed back. These features help maintain stability of the unit.

8. If module is to be mounted in the center of the table, order a Cx console (centered modesty, pg. 39) for additional support.

9. Module width and depth cannot be modified. eduction in the height of the overall module or riser requires an upcharge.

10. When using a 3″ riser you can retain the overall height of the module, by adding 3″ to the sorting height. For example, an S5-42E6 would become an S5-45E3. .

11. Modules with 3″ risers are closed in the front and back of the riser and fasten to the console with a locking cam accessed from outside of the module.

12. All modules are shipped fully assembled. When getting freight quotes, specify Class 100. If dimensions are required, add 3″ to each dimension for packing materials.

# Sort Modules

## Standard Closed Back, No Riser

S4-36C

| MODEL # | WIDTH | SLOTS | HEIGHT | WEIGHT |
|---|---|---|---|---|
| S1-18C | 13 1/16 | 6 | 18 | 34 |
| S2-18C | 24 3/4 | 12 | 18 | 51 |
| S3-18C | 36 7/16 | 18 | 18 | 74 |
| S4-18C | 48 1/8 | 24 | 18 | 92 |
| S5-18C | 59 13/16 | 30 | 18 | 109 |
| S6-18C | 71 1/2 | 36 | 18 | 125 |
| S1-24C | 13 1/16 | 6 | 24 | 40 |
| S2-24C | 24 3/4 | 12 | 24 | 58 |
| S3-24C | 36 7/16 | 18 | 24 | 86 |
| S4-24C | 48 1/8 | 24 | 24 | 107 |
| S5-24C | 59 13/16 | 30 | 24 | 129 |
| S6-24C | 71 1/2 | 36 | 24 | 150 |
| S1-30C | 13 1/16 | 6 | 30 | 44 |
| S2-30C | 24 3/4 | 12 | 30 | 67 |
| S3-30C | 36 7/16 | 18 | 30 | 98 |
| S4-30C | 48 1/8 | 24 | 30 | 122 |
| S5-30C | 59 13/16 | 30 | 30 | 147 |
| S6-30C | 71 1/2 | 36 | 30 | 173 |
| S1-36C | 13 1/16 | 8 | 36 | 51 |
| S2-36C | 24 3/4 | 16 | 36 | 77 |
| S3-36C | 36 7/16 | 24 | 36 | 113 |
| S4-36C | 48 1/8 | 32 | 36 | 143 |
| S5-36C | 59 13/16 | 40 | 36 | 172 |
| S6-36C | 71 1/2 | 48 | 36 | 201 |
| S1-42C | 13 1/16 | 8 | 42 | 56 |
| S2-42C | 24 3/4 | 16 | 42 | 86 |
| S3-42C | 36 7/16 | 24 | 42 | 128 |
| S4-42C | 48 1/8 | 32 | 42 | 158 |
| S5-42C | 59 13/16 | 40 | 42 | 191 |
| S6-42C | 71 1/2 | 48 | 42 | 224 |
| S1-48C | 13 1/16 | 8 | 48 | 62 |
| S2-48C | 24 3/4 | 16 | 48 | 95 |
| S3-48C | 36 7/16 | 24 | 48 | 141 |
| S4-48C | 48 1/8 | 32 | 48 | 174 |
| S5-48C | 59 13/16 | 40 | 48 | 210 |
| S6-48C | 71 1/2 | 48 | 48 | 246 |

Depth on all Standard-Size Sort Modules is 12 7/8″.

## Standard Closed Back, 3” Riser

S4-36CE03

| MODEL # | WIDTH | SLOTS | HEIGHT | WEIGHT |
|---|---|---|---|---|
| S1-18CE03 | 13 1/16 | 6 | 21 | 37 |
| S2-18CE03 | 24 3/4 | 12 | 21 | 54 |
| S3-18CE03 | 36 7/16 | 18 | 21 | 77 |
| S4-18CE03 | 48 1/8 | 24 | 21 | 95 |
| S5-18CE03 | 59 13/16 | 30 | 21 | 112 |
| S6-18CE03 | 71 1/2 | 36 | 21 | 128 |

## Standard Closed Back, 3” Riser (con’t.)

| MODEL # | WIDTH | SLOTS | HEIGHT | WEIGHT |
|---|---|---|---|---|
| S1-24CE03 | 13 1/16 | 6 | 27 | 43 |
| S2-24CE03 | 24 3/4 | 12 | 27 | 61 |
| S3-24CE03 | 36 7/16 | 18 | 27 | 89 |
| S4-24CE03 | 48 1/8 | 24 | 27 | 110 |
| S5-24CE03 | 59 13/16 | 30 | 27 | 132 |
| S6-24CE03 | 71 1/2 | 36 | 27 | 153 |
| S1-30CE03 | 13 1/16 | 6 | 33 | 47 |
| S2-30CE03 | 24 3/4 | 12 | 33 | 70 |
| S3-30CE03 | 36 7/16 | 18 | 33 | 101 |
| S4-30CE03 | 48 1/8 | 24 | 33 | 125 |
| S5-30CE03 | 59 13/16 | 30 | 33 | 150 |
| S6-30CE03 | 71 1/2 | 36 | 33 | 176 |
| S1-36CE03 | 13 1/16 | 8 | 39 | 54 |
| S2-36CE03 | 24 3/4 | 16 | 39 | 80 |
| S3-36CE03 | 36 7/16 | 24 | 39 | 116 |
| S4-36CE03 | 48 1/8 | 32 | 39 | 146 |
| S5-36CE03 | 59 13/16 | 40 | 39 | 175 |
| S6-36CE03 | 71 1/2 | 48 | 39 | 204 |
| S1-42CE03 | 13 1/16 | 8 | 45 | 59 |
| S2-42CE03 | 24 3/4 | 16 | 45 | 89 |
| S3-42CE03 | 36 7/16 | 24 | 45 | 131 |
| S4-42CE03 | 48 1/8 | 32 | 45 | 161 |
| S5-42CE03 | 59 13/16 | 40 | 45 | 194 |
| S6-42CE03 | 71 1/2 | 48 | 45 | 227 |

Depth on all Standard-Size Sort Modules is 12 7/8″.
For open riser, change model # to P
(for pass-through).

## Standard Closed Back, 6” Riser

S3-30CE06

| MODEL # | WIDTH | SLOTS | HEIGHT | WEIGHT |
|---|---|---|---|---|
| S1-18CE06 | 13 1/16 | 6 | 24 | 39 |
| S2-18CE06 | 24 3/4 | 12 | 24 | 56 |
| S3-18CE06 | 36 7/16 | 18 | 24 | 81 |
| S4-18CE06 | 48 1/8 | 24 | 24 | 100 |
| S5-18CE06 | 59 13/16 | 30 | 24 | 122 |
| S6-18CE06 | 71 1/2 | 36 | 24 | 144 |
| S1-24CE06 | 13 1/16 | 6 | 30 | 44 |
| S2-24CE06 | 24 3/4 | 12 | 30 | 65 |
| S3-24CE06 | 36 7/16 | 18 | 30 | 95 |
| S4-24CE06 | 48 1/8 | 24 | 30 | 117 |
| S5-24CE06 | 59 13/16 | 30 | 30 | 141 |
| S6-24CE06 | 71 1/2 | 36 | 30 | 165 |
| S1-30CE06 | 13 1/16 | 6 | 36 | 48 |
| S2-30CE06 | 24 3/4 | 12 | 36 | 73 |
| S3-30CE06 | 36 7/16 | 18 | 36 | 107 |
| S4-30CE06 | 48 1/8 | 24 | 36 | 132 |
| S5-30CE06 | 59 13/16 | 30 | 36 | 160 |
| S6-30CE06 | 71 1/2 | 36 | 36 | 188 |
| S1-36CE06 | 13 1/16 | 8 | 42 | 56 |

## Standard Closed Back, 6" Riser (con't.)

| MODEL # | WIDTH | SLOTS | HEIGHT | WEIGHT |
|---|---|---|---|---|
| S2-36CE06 | 24 3/4 | 16 | 42 | 84 |
| S3-36CE06 | 36 7/16 | 24 | 42 | 122 |
| S4-36CE06 | 48 1/8 | 32 | 42 | 153 |
| S5-36CE06 | 59 13/16 | 40 | 42 | 185 |
| S6-36CE06 | 71 1/2 | 48 | 42 | 218 |
| S1-42CE06 | 13 1/16 | 8 | 48 | 64 |
| S2-42CE06 | 24 3/4 | 16 | 48 | 95 |
| S3-42CE06 | 36 7/16 | 24 | 48 | 138 |
| S4-42CE06 | 48 1/8 | 32 | 48 | 173 |
| S5-42CE06 | 59 13/16 | 40 | 48 | 185 |
| S6-42CE06 | 71 1/2 | 48 | 48 | 197 |

Depth on all Standard-Size Sort Modules is 12 7/8".
For open riser, change model # to P
(for pass-through).

## Standard Closed Back, 12" Riser

S4-24CE12

| MODEL # | WIDTH | SLOTS | HEIGHT | WEIGHT |
|---|---|---|---|---|
| S1-18CE12 | 13 1/16 | 6 | 30 | 44 |
| S2-18CE12 | 24 3/4 | 12 | 30 | 63 |
| S3-18CE12 | 36 7/16 | 18 | 30 | 89 |
| S4-18CE12 | 48 1/8 | 24 | 30 | 110 |
| S5-18CE12 | 59 13/16 | 30 | 30 | 134 |
| S6-18CE12 | 71 1/2 | 36 | 30 | 158 |
| S1-24CE12 | 13 1/16 | 6 | 36 | 48 |
| S2-24CE12 | 24 3/4 | 12 | 36 | 70 |
| S3-24CE12 | 36 7/16 | 18 | 36 | 101 |
| S4-24CE12 | 48 1/8 | 24 | 36 | 125 |
| S5-24CE12 | 59 13/16 | 30 | 36 | 154 |
| S6-24CE12 | 71 1/2 | 36 | 36 | 182 |
| S1-30CE12 | 13 1/16 | 6 | 42 | 55 |
| S2-30CE12 | 24 3/4 | 12 | 42 | 79 |
| S3-30CE12 | 36 7/16 | 18 | 42 | 113 |
| S4-30CE12 | 48 1/8 | 24 | 42 | 142 |
| S5-30CE12 | 59 13/16 | 30 | 42 | 173 |
| S6-30CE12 | 71 1/2 | 36 | 42 | 205 |
| S1-36CE12 | 13 1/16 | 8 | 48 | 62 |
| S2-36CE12 | 24 3/4 | 16 | 48 | 88 |
| S3-36CE12 | 36 7/16 | 24 | 48 | 125 |
| S4-36CE12 | 48 1/8 | 32 | 48 | 157 |
| S5-36CE12 | 59 13/16 | 40 | 48 | 193 |
| S6-36CE12 | 71 1/2 | 48 | 48 | 228 |

Depth on all Standard-Size Sort Modules is 12 7/8".
For open riser, change model # to P
(for pass-through).

## Standard Closed Back, 18" Riser

S4-30CE18

| MODEL # | WIDTH | SLOTS | HEIGHT | WEIGHT |
|---|---|---|---|---|
| S1-18CE18 | 13 1/16 | 6 | 36 | 47 |
| S2-18CE18 | 24 3/4 | 12 | 36 | 68 |
| S3-18CE18 | 36 7/16 | 18 | 36 | 98 |
| S4-18CE18 | 48 1/8 | 24 | 36 | 120 |
| S5-18CE18 | 59 13/16 | 30 | 36 | 147 |
| S6-18CE18 | 71 1/2 | 36 | 36 | 176 |
| S1-24CE18 | 13 1/16 | 6 | 42 | 54 |
| S2-24CE18 | 24 3/4 | 12 | 42 | 77 |
| S3-24CE18 | 36 7/16 | 18 | 42 | 110 |
| S4-24CE18 | 48 1/8 | 24 | 42 | 135 |
| S5-24CE18 | 59 13/16 | 30 | 42 | 167 |
| S6-24CE18 | 71 1/2 | 36 | 42 | 198 |
| S1-30CE18 | 13 1/16 | 6 | 48 | 61 |
| S2-30CE18 | 24 3/4 | 12 | 48 | 86 |
| S3-30CE18 | 36 7/16 | 18 | 48 | 122 |
| S4-30CE18 | 48 1/8 | 24 | 48 | 152 |
| S5-30CE18 | 59 13/16 | 30 | 48 | 186 |
| S6-30CE18 | 71 1/2 | 36 | 48 | 221 |

Depth on all Standard-Size Sort Modules is 12 7/8".
For open riser, change model # to P
(for pass-through).

## Standard Open Back, No Riser

S4-30O

| MODEL # | WIDTH | SLOTS | HEIGHT | WEIGHT |
|---|---|---|---|---|
| S1-18O | 13 1/16 | 6 | 18 | 34 |
| S2-18O | 24 3/4 | 12 | 18 | 51 |
| S3-18O | 36 7/16 | 18 | 18 | 74 |
| S4-18O | 48 1/8 | 24 | 18 | 92 |
| S5-18O | 59 13/16 | 30 | 18 | 109 |
| S6-18O | 71 1/2 | 36 | 18 | 125 |
| S1-24O | 13 1/16 | 6 | 24 | 40 |
| S2-24O | 24 3/4 | 12 | 24 | 58 |
| S3-24O | 36 7/16 | 18 | 24 | 86 |
| S4-24O | 48 1/8 | 24 | 24 | 107 |
| S5-24O | 59 13/16 | 30 | 24 | 129 |
| S6-24O | 71 1/2 | 36 | 24 | 150 |
| S1-30O | 13 1/16 | 6 | 30 | 44 |
| S2-30O | 24 3/4 | 12 | 30 | 67 |
| S3-30O | 36 7/16 | 18 | 30 | 98 |
| S4-30O | 48 1/8 | 24 | 30 | 122 |
| S5-30O | 59 13/16 | 30 | 30 | 147 |
| S6-30O | 71 1/2 | 36 | 30 | 173 |
| S1-36O | 13 1/16 | 8 | 36 | 51 |
| S2-36O | 24 3/4 | 16 | 36 | 77 |
| S3-36O | 36 7/16 | 24 | 36 | 113 |
| S4-36O | 48 1/8 | 32 | 36 | 143 |
| S5-36O | 59 13/16 | 40 | 36 | 172 |
| S6-36O | 71 1/2 | 48 | 36 | 201 |
| S1-42O | 13 1/16 | 8 | 42 | 56 |

## Standard Open Back, No Riser (con't.)

| MODEL # | WIDTH | SLOTS | HEIGHT | WEIGHT |
|---|---|---|---|---|
| S2-420 | 24 3/4 | 16 | 42 | 86 |
| S3-420 | 36 7/16 | 24 | 42 | 128 |
| S4-420 | 48 1/8 | 32 | 42 | 158 |
| S5-420 | 59 13/16 | 40 | 42 | 191 |
| S6-420 | 71 1/2 | 48 | 42 | 224 |
| S1-480 | 13 1/16 | 8 | 48 | 62 |
| S2-480 | 24 3/4 | 16 | 48 | 95 |
| S3-480 | 36 7/16 | 24 | 48 | 141 |
| S4-480 | 48 1/8 | 32 | 48 | 174 |
| S5-480 | 59 13/16 | 40 | 48 | 210 |
| S6-480 | 71 1/2 | 48 | 48 | 246 |

Depth on all Standard-Size Sort Modules is 12 7/8″.
Open back risers are not available on open back modules.

## Standard Open Back, 3" Riser

S4-300E03

| MODEL # | WIDTH | SLOTS | HEIGHT | WEIGHT |
|---|---|---|---|---|
| S1-180E03 | 13 1/16 | 6 | 21 | 36 |
| S2-180E03 | 24 3/4 | 12 | 21 | 53 |
| S3-180E03 | 36 7/16 | 18 | 21 | 78 |
| S4-180E03 | 48 1/8 | 24 | 21 | 97 |
| S5-180E03 | 59 13/16 | 30 | 21 | 119 |
| S6-180E03 | 71 1/2 | 36 | 21 | 141 |
| S1-240E03 | 13 1/16 | 6 | 27 | 41 |
| S2-240E03 | 24 3/4 | 12 | 27 | 62 |
| S3-240E03 | 36 7/16 | 18 | 27 | 92 |
| S4-240E03 | 48 1/8 | 24 | 27 | 114 |
| S5-240E03 | 59 13/16 | 30 | 27 | 138 |
| S6-240E03 | 71 1/2 | 36 | 27 | 162 |
| S1-300E03 | 13 1/16 | 6 | 33 | 45 |
| S2-300E03 | 24 3/4 | 12 | 33 | 70 |
| S3-300E03 | 36 7/16 | 18 | 33 | 104 |
| S4-300E03 | 48 1/8 | 24 | 33 | 129 |
| S5-300E03 | 59 13/16 | 30 | 33 | 157 |
| S6-300E03 | 71 1/2 | 36 | 33 | 185 |
| S1-360E03 | 13 1/16 | 8 | 39 | 53 |
| S2-360E03 | 24 3/4 | 16 | 39 | 81 |
| S3-360E03 | 36 7/16 | 24 | 39 | 119 |
| S4-360E03 | 48 1/8 | 32 | 39 | 150 |
| S5-360E03 | 59 13/16 | 40 | 39 | 182 |
| S6-360E03 | 71 1/2 | 48 | 39 | 215 |
| S1-420E03 | 13 1/16 | 8 | 45 | 61 |
| S2-420E03 | 24 3/4 | 16 | 45 | 92 |
| S3-420E03 | 36 7/16 | 24 | 45 | 135 |
| S4-420E03 | 48 1/8 | 32 | 45 | 170 |
| S5-420E03 | 59 13/16 | 40 | 45 | 182 |
| S6-420E03 | 71 1/2 | 48 | 45 | 194 |

Depth on all Standard-Size Sort Modules is 12 7/8″.
Open back risers are not available on open back modules.

## Standard Open Back, 6" Riser

S4-300E06

| MODEL # | WIDTH | SLOTS | HEIGHT | WEIGHT |
|---|---|---|---|---|
| S1-180E06 | 13 1/16 | 6 | 24 | 39 |
| S2-180E06 | 24 3/4 | 12 | 24 | 56 |
| S3-180E06 | 36 7/16 | 18 | 24 | 81 |
| S4-180E06 | 48 1/8 | 24 | 24 | 100 |
| S5-180E06 | 59 13/16 | 30 | 24 | 122 |
| S6-180E06 | 71 1/2 | 36 | 24 | 144 |
| S1-240E06 | 13 1/16 | 6 | 30 | 44 |
| S2-240E06 | 24 3/4 | 12 | 30 | 65 |
| S3-240E06 | 36 7/16 | 18 | 30 | 95 |
| S4-240E06 | 48 1/8 | 24 | 30 | 117 |
| S5-240E06 | 59 13/16 | 30 | 30 | 141 |
| S6-240E06 | 71 1/2 | 36 | 30 | 165 |
| S1-300E06 | 13 1/16 | 6 | 36 | 48 |
| S2-300E06 | 24 3/4 | 12 | 36 | 73 |
| S3-300E06 | 36 7/16 | 18 | 36 | 107 |
| S4-300E06 | 48 1/8 | 24 | 36 | 132 |
| S5-300E06 | 59 13/16 | 30 | 36 | 160 |
| S6-300E06 | 71 1/2 | 36 | 36 | 188 |
| S1-360E06 | 13 1/16 | 8 | 42 | 56 |
| S2-360E06 | 24 3/4 | 16 | 42 | 84 |
| S3-360E06 | 36 7/16 | 24 | 42 | 122 |
| S4-360E06 | 48 1/8 | 32 | 42 | 153 |
| S5-360E06 | 59 13/16 | 40 | 42 | 185 |
| S6-360E06 | 71 1/2 | 48 | 42 | 218 |
| S1-420E06 | 13 1/16 | 8 | 48 | 64 |
| S2-420E06 | 24 3/4 | 16 | 48 | 95 |
| S3-420E06 | 36 7/16 | 24 | 48 | 138 |
| S4-420E06 | 48 1/8 | 32 | 48 | 173 |
| S5-420E06 | 59 13/16 | 40 | 48 | 185 |
| S6-420E06 | 71 1/2 | 48 | 48 | 197 |

Depth on all Standard-Size Sort Modules is 12 7/8″.
Open back risers are not available on open back modules.

## Standard Open Back, 12" Riser

S3-240E12

| MODEL # | WIDTH | SLOTS | HEIGHT | WEIGHT |
|---|---|---|---|---|
| S1-180E12 | 13 1/16 | 6 | 30 | 44 |
| S2-180E12 | 24 3/4 | 12 | 30 | 63 |
| S3-180E12 | 36 7/16 | 18 | 30 | 89 |
| S4-180E12 | 48 1/8 | 24 | 30 | 110 |
| S5-180E12 | 59 13/16 | 30 | 30 | 134 |
| S6-180E12 | 71 1/2 | 36 | 30 | 158 |
| S1-240E12 | 13 1/16 | 6 | 36 | 48 |
| S2-240E12 | 24 3/4 | 12 | 36 | 70 |
| S3-240E12 | 36 7/16 | 18 | 36 | 101 |
| S4-240E12 | 48 1/8 | 24 | 36 | 125 |
| S5-240E12 | 59 13/16 | 30 | 36 | 154 |
| S6-240E12 | 71 1/2 | 36 | 36 | 182 |
| S1-300E12 | 13 1/16 | 6 | 42 | 55 |

## Standard Open Back, 12" Riser (cont.)

| MODEL # | WIDTH | SLOTS | HEIGHT | WEIGHT |
|---|---|---|---|---|
| S2-30OE12 | 24 3/4 | 12 | 42 | 79 |
| S3-30OE12 | 36 7/16 | 18 | 42 | 113 |
| S4-30OE12 | 48 1/8 | 24 | 42 | 142 |
| S5-30OE12 | 59 13/16 | 30 | 42 | 173 |
| S6-30OE12 | 71 1/2 | 36 | 42 | 205 |
| S1-36OE12 | 13 1/16 | 8 | 48 | 62 |
| S2-36OE12 | 24 3/4 | 16 | 48 | 88 |
| S3-36OE12 | 36 7/16 | 24 | 48 | 125 |
| S4-36OE12 | 48 1/8 | 32 | 48 | 157 |
| S5-36OE12 | 59 13/16 | 40 | 48 | 193 |
| S6-36OE12 | 71 1/2 | 48 | 48 | 228 |

Depth on all Standard-Size Sort Modules is 12 7/8″.
Open back risers are not available on open back modules.

## Standard Open Back, 18" Riser

S4-24OE18

| MODEL # | WIDTH | SLOTS | HEIGHT | WEIGHT |
|---|---|---|---|---|
| S1-18OE18 | 13 1/16 | 6 | 36 | 47 |
| S2-18OE18 | 24 3/4 | 12 | 36 | 68 |
| S3-18OE18 | 36 7/16 | 18 | 36 | 98 |
| S4-18OE18 | 48 1/8 | 24 | 36 | 120 |
| S5-18OE18 | 59 13/16 | 30 | 36 | 147 |
| S6-18OE18 | 71 1/2 | 36 | 36 | 176 |
| S1-24OE18 | 13 1/16 | 6 | 42 | 54 |
| S2-24OE18 | 24 3/4 | 12 | 42 | 77 |
| S3-24OE18 | 36 7/16 | 18 | 42 | 110 |
| S4-24OE18 | 48 1/8 | 24 | 42 | 135 |
| S5-24OE18 | 59 13/16 | 30 | 42 | 167 |
| S6-24OE18 | 71 1/2 | 36 | 42 | 198 |
| S1-30OE18 | 13 1/16 | 6 | 48 | 61 |
| S2-30OE18 | 24 3/4 | 12 | 48 | 86 |
| S3-30OE18 | 36 7/16 | 18 | 48 | 122 |
| S4-30OE18 | 48 1/8 | 24 | 48 | 152 |
| S5-30OE18 | 59 13/16 | 30 | 48 | 186 |
| S6-30BE18 | 71 1/2 | 36 | 48 | 221 |

Depth on all Standard-Size Sort Modules is 12 7/8″.
Open back risers are not available on open back modules.

## Standard Plexiglass Back, No Riser

S4-36P

| MODEL # | WIDTH | SLOTS | HEIGHT | WEIGHT |
|---|---|---|---|---|
| S1-18P | 13 1/16 | 6 | 18 | 34 |
| S2-18P | 24 3/4 | 12 | 18 | 51 |
| S3-18P | 36 7/16 | 18 | 18 | 67 |
| S4-18P | 48 1/8 | 24 | 18 | 84 |
| S5-18P | 59 13/16 | 30 | 18 | 99 |
| S6-18P | 71 1/2 | 36 | 18 | 114 |
| S1-24P | 13 1/16 | 6 | 24 | 40 |
| S2-24P | 24 3/4 | 12 | 24 | 58 |
| S3-24P | 36 7/16 | 18 | 24 | 78 |

## Standard Plexiglass Back, No Riser (cont.)

| MODEL # | WIDTH | SLOTS | HEIGHT | WEIGHT |
|---|---|---|---|---|
| S4-24P | 48 1/8 | 24 | 24 | 97 |
| S5-24P | 59 13/16 | 30 | 24 | 117 |
| S6-24P | 71 1/2 | 36 | 24 | 136 |
| S1-30P | 13 1/16 | 6 | 30 | 44 |
| S2-30P | 24 3/4 | 12 | 30 | 67 |
| S3-30P | 36 7/16 | 18 | 30 | 89 |
| S4-30P | 48 1/8 | 24 | 30 | 111 |
| S5-30P | 59 13/16 | 30 | 30 | 134 |
| S6-30P | 71 1/2 | 36 | 30 | 157 |
| S1-36P | 13 1/16 | 8 | 36 | 51 |
| S2-36P | 24 3/4 | 16 | 36 | 77 |
| S3-36P | 36 7/16 | 24 | 36 | 103 |
| S4-36P | 48 1/8 | 32 | 36 | 130 |
| S5-36P | 59 13/16 | 40 | 36 | 156 |
| S6-36P | 71 1/2 | 48 | 36 | 183 |
| S1-42P | 13 1/16 | 8 | 42 | 56 |
| S2-42P | 24 3/4 | 16 | 42 | 86 |
| S3-42P | 36 7/16 | 24 | 42 | 116 |
| S4-42P | 48 1/8 | 32 | 42 | 144 |
| S5-42P | 59 13/16 | 40 | 42 | 174 |
| S6-42P | 71 1/2 | 48 | 42 | 204 |
| S1-48P | 13 1/16 | 8 | 48 | 62 |
| S2-48P | 24 3/4 | 16 | 48 | 95 |
| S3-48P | 36 7/16 | 24 | 48 | 128 |
| S4-48P | 48 1/8 | 32 | 48 | 158 |
| S5-48P | 59 13/16 | 40 | 48 | 191 |
| S6-48P | 71 1/2 | 48 | 48 | 224 |

Depth on all Standard-Size Sort Modules is 12 7/8″.

## Standard Plexiglass Back, 3" Riser

S4-36PE03

| MODEL # | WIDTH | SLOTS | HEIGHT | WEIGHT |
|---|---|---|---|---|
| S1-18PE03 | 13 1/16 | 6 | 21 | 37 |
| S2-18PE03 | 24 3/4 | 12 | 21 | 54 |
| S3-18PE03 | 36 7/16 | 18 | 21 | 70 |
| S4-18PE03 | 48 1/8 | 24 | 21 | 87 |
| S5-18PE03 | 59 13/16 | 30 | 21 | 102 |
| S6-18PE03 | 71 1/2 | 36 | 21 | 117 |
| S1-24PE03 | 13 1/16 | 6 | 27 | 43 |
| S2-24PE03 | 24 3/4 | 12 | 27 | 61 |
| S3-24PE03 | 36 7/16 | 18 | 27 | 81 |
| S4-24PE03 | 48 1/8 | 24 | 27 | 100 |
| S5-24PE03 | 59 13/16 | 30 | 27 | 120 |
| S6-24PE03 | 71 1/2 | 36 | 27 | 139 |
| S1-30PE03 | 13 1/16 | 6 | 33 | 47 |
| S2-30PE03 | 24 3/4 | 12 | 33 | 70 |
| S3-30PE03 | 36 7/16 | 18 | 33 | 92 |
| S4-30PE03 | 48 1/8 | 24 | 33 | 114 |
| S5-30PE03 | 59 13/16 | 30 | 33 | 137 |
| S6-30PE03 | 71 1/2 | 36 | 33 | 160 |

## Standard Plexiglass Back, 3" Riser (con't.)

| MODEL # | WIDTH | SLOTS | HEIGHT | WEIGHT |
|---|---|---|---|---|
| S1-36PE03 | 13 1/16 | 8 | 39 | 54 |
| S2-36PE03 | 24 3/4 | 16 | 39 | 80 |
| S3-36PE03 | 36 7/16 | 24 | 39 | 106 |
| S4-36PE03 | 48 1/8 | 32 | 39 | 133 |
| S5-36PE03 | 59 13/16 | 40 | 39 | 159 |
| S6-36PE03 | 71 1/2 | 48 | 39 | 186 |
| S1-42PE03 | 13 1/16 | 8 | 45 | 59 |
| S2-42PE03 | 24 3/4 | 16 | 45 | 89 |
| S3-42PE03 | 36 7/16 | 24 | 45 | 119 |
| S4-42PE03 | 48 1/8 | 32 | 45 | 147 |
| S5-42PE03 | 59 13/16 | 40 | 45 | 177 |
| S6-42PE03 | 71 1/2 | 48 | 45 | 207 |

Depth on all Standard-Size Sort Modules is 12 7/8".
For open riser, change model # to P
(for pass-through).

## Standard Plexiglass Back, 6" Riser

S4-30PE06

| MODEL # | WIDTH | SLOTS | HEIGHT | WEIGHT |
|---|---|---|---|---|
| S1-18PE06 | 13 1/16 | 6 | 24 | 39 |
| S2-18PE06 | 24 3/4 | 12 | 24 | 56 |
| S3-18PE06 | 36 7/16 | 18 | 24 | 74 |
| S4-18PE06 | 48 1/8 | 24 | 24 | 91 |
| S5-18PE06 | 59 13/16 | 30 | 24 | 111 |
| S6-18PE06 | 71 1/2 | 36 | 24 | 131 |
| S1-24PE06 | 13 1/16 | 6 | 30 | 44 |
| S2-24PE06 | 24 3/4 | 12 | 30 | 65 |
| S3-24PE06 | 36 7/16 | 18 | 30 | 86 |
| S4-24PE06 | 48 1/8 | 24 | 30 | 106 |
| S5-24PE06 | 59 13/16 | 30 | 30 | 128 |
| S6-24PE06 | 71 1/2 | 36 | 30 | 150 |
| S1-30PE06 | 13 1/16 | 6 | 36 | 48 |
| S2-30PE06 | 24 3/4 | 12 | 36 | 73 |
| S3-30PE06 | 36 7/16 | 18 | 36 | 97 |
| S4-30PE06 | 48 1/8 | 24 | 36 | 120 |
| S5-30PE06 | 59 13/16 | 30 | 36 | 145 |
| S6-30PE06 | 71 1/2 | 36 | 36 | 171 |
| S1-36PE06 | 13 1/16 | 8 | 42 | 56 |
| S2-36PE06 | 24 3/4 | 16 | 42 | 84 |
| S3-36PE06 | 36 7/16 | 24 | 42 | 111 |
| S4-36PE06 | 48 1/8 | 32 | 42 | 139 |
| S5-36PE06 | 59 13/16 | 40 | 42 | 168 |
| S6-36PE06 | 71 1/2 | 48 | 42 | 198 |
| S1-42PE06 | 13 1/16 | 8 | 48 | 64 |
| S2-42PE06 | 24 3/4 | 16 | 48 | 95 |
| S3-42PE06 | 36 7/16 | 24 | 48 | 125 |
| S4-42PE06 | 48 1/8 | 32 | 48 | 157 |

## Standard Plexiglass Back, 6" Riser (con't.)

| MODEL # | WIDTH | SLOTS | HEIGHT | WEIGHT |
|---|---|---|---|---|
| S5-42PE06 | 59 13/16 | 40 | 48 | 191 |
| S6-42PE06 | 71 1/2 | 48 | 48 | 226 |

Depth on all Standard-Size Sort Modules is 12 7/8".
For open riser, change model # to P
(for pass-through).

## Standard Plexiglass Back, 12" Riser

S4-30PE12

| MODEL # | WIDTH | SLOTS | HEIGHT | WEIGHT |
|---|---|---|---|---|
| S1-18PE12 | 13 1/16 | 6 | 30 | 44 |
| S2-18PE12 | 24 3/4 | 12 | 30 | 63 |
| S3-18PE12 | 36 7/16 | 18 | 30 | 81 |
| S4-18PE12 | 48 1/8 | 24 | 30 | 100 |
| S5-18PE12 | 59 13/16 | 30 | 30 | 122 |
| S6-18PE12 | 71 1/2 | 36 | 30 | 144 |
| S1-24PE12 | 13 1/16 | 6 | 36 | 48 |
| S2-24PE12 | 24 3/4 | 12 | 36 | 70 |
| S3-24PE12 | 36 7/16 | 18 | 36 | 92 |
| S4-24PE12 | 48 1/8 | 24 | 36 | 114 |
| S5-24PE12 | 59 13/16 | 30 | 36 | 140 |
| S6-24PE12 | 71 1/2 | 36 | 36 | 165 |
| S1-30PE12 | 13 1/16 | 6 | 42 | 55 |
| S2-30PE12 | 24 3/4 | 12 | 42 | 79 |
| S3-30PE12 | 36 7/16 | 18 | 42 | 103 |
| S4-30PE12 | 48 1/8 | 24 | 42 | 129 |
| S5-30PE12 | 59 13/16 | 30 | 42 | 157 |
| S6-30PE12 | 71 1/2 | 36 | 42 | 186 |
| S1-36PE12 | 13 1/16 | 8 | 48 | 62 |
| S2-36PE12 | 24 3/4 | 16 | 48 | 88 |
| S3-36PE12 | 36 7/16 | 24 | 48 | 114 |
| S4-36PE12 | 48 1/8 | 32 | 48 | 143 |
| S5-36PE12 | 59 13/16 | 40 | 48 | 175 |
| S6-36PE12 | 71 1/2 | 48 | 48 | 207 |

Depth on all Standard-Size Sort Modules is 12 7/8".
For open riser, change model # to P
(for pass-through).

## Standard Plexiglass Back, 18" Riser

S4-24PE18

| MODEL # | WIDTH | SLOTS | HEIGHT | WEIGHT |
|---|---|---|---|---|
| S1-18PE18 | 13 1/16 | 6 | 36 | 47 |
| S2-18PE18 | 24 3/4 | 12 | 36 | 68 |
| S3-18PE18 | 36 7/16 | 18 | 36 | 98 |
| S4-18PE18 | 48 1/8 | 24 | 36 | 109 |
| S5-18PE18 | 59 13/16 | 30 | 36 | 134 |
| S6-18PE18 | 71 1/2 | 36 | 36 | 160 |
| S1-24PE18 | 13 1/16 | 6 | 42 | 59 |
| S2-24PE18 | 24 3/4 | 12 | 42 | 77 |
| S3-24PE18 | 36 7/16 | 18 | 42 | 95 |
| S4-24PE18 | 48 1/8 | 24 | 42 | 123 |
| S5-24PE18 | 59 13/16 | 30 | 42 | 152 |

## Standard Plexiglass Back, 18" Riser (con't.)

| MODEL # | WIDTH | SLOTS | HEIGHT | WEIGHT |
|---|---|---|---|---|
| S6-24PE18 | 71 1/2 | 36 | 42 | 180 |
| S1-30PE18 | 13 1/16 | 6 | 48 | 54 |
| S2-30PE18 | 24 3/4 | 12 | 48 | 77 |
| S3-30PE18 | 36 7/16 | 18 | 48 | 100 |
| S4-30PE18 | 48 1/8 | 24 | 48 | 138 |
| S5-30PE18 | 59 13/16 | 30 | 48 | 169 |
| S6-30PE18 | 71 1/2 | 36 | 48 | 201 |

Depth on all Standard-Size Sort Modules is 12 7/8".
For open riser, change model # to P
(for pass-through).

## Legal Closed Back, No Riser

L4-36C

| MODEL # | WIDTH | SLOTS | HEIGHT | WEIGHT |
|---|---|---|---|---|
| L1-18C | 13 1/16 | 6 | 18 | 40 |
| L2-18C | 24 3/4 | 12 | 18 | 59 |
| L3-18C | 36 7/16 | 18 | 18 | 87 |
| L4-18C | 48 1/8 | 24 | 18 | 109 |
| L5-18C | 59 13/16 | 30 | 18 | 131 |
| L6-18C | 71 1/2 | 36 | 18 | 153 |
| L1-24C | 13 1/16 | 6 | 24 | 46 |
| L2-24C | 24 3/4 | 12 | 24 | 69 |
| L3-24C | 36 7/16 | 18 | 24 | 103 |
| L4-24C | 48 1/8 | 24 | 24 | 129 |
| L5-24C | 59 13/16 | 30 | 24 | 155 |
| L6-24C | 71 1/2 | 36 | 24 | 182 |
| L1-30C | 13 1/16 | 6 | 30 | 53 |
| L2-30C | 24 3/4 | 12 | 30 | 80 |
| L3-30C | 36 7/16 | 18 | 30 | 119 |
| L4-30C | 48 1/8 | 24 | 30 | 147 |
| L5-30C | 59 13/16 | 30 | 30 | 178 |
| L6-30C | 71 1/2 | 36 | 30 | 208 |
| L1-36C | 13 1/16 | 8 | 36 | 61 |
| L2-36C | 24 3/4 | 16 | 36 | 92 |
| L3-36C | 36 7/16 | 24 | 36 | 136 |
| L4-36C | 48 1/8 | 32 | 36 | 172 |
| L5-36C | 59 13/16 | 40 | 36 | 207 |
| L6-36C | 71 1/2 | 48 | 36 | 242 |
| L1-42C | 13 1/16 | 8 | 42 | 68 |
| L2-42C | 24 3/4 | 16 | 42 | 103 |
| L3-42C | 36 7/16 | 24 | 42 | 153 |
| L4-42C | 48 1/8 | 32 | 42 | 191 |
| L5-42C | 59 13/16 | 40 | 42 | 231 |
| L6-42C | 71 1/2 | 48 | 42 | 271 |
| L1-48C | 13 1/16 | 8 | 48 | 76 |
| L2-48C | 24 3/4 | 16 | 48 | 114 |
| L3-48C | 36 7/16 | 24 | 48 | 168 |
| L4-48C | 48 1/8 | 32 | 48 | 210 |
| L5-48C | 59 13/16 | 40 | 48 | 242 |
| L6-48C | 71 1/2 | 48 | 48 | 300 |

Depth on all Legal-Size Sort Modules is 16 7/8".

## Legal Closed Back, 3" Riser

L4-36CE03

| MODEL # | WIDTH | SLOTS | HEIGHT | WEIGHT |
|---|---|---|---|---|
| L1-18CE03 | 13 1/16 | 6 | 21 | 43 |
| L2-18CE03 | 24 3/4 | 12 | 21 | 62 |
| L3-18CE03 | 36 7/16 | 18 | 21 | 90 |
| L4-18CE03 | 48 1/8 | 24 | 21 | 112 |
| L5-18CE03 | 59 13/16 | 30 | 21 | 134 |
| L6-18CE03 | 71 1/2 | 36 | 21 | 156 |
| L1-24CE03 | 13 1/16 | 6 | 27 | 49 |
| L2-24CE03 | 24 3/4 | 12 | 27 | 72 |
| L3-24CE03 | 36 7/16 | 18 | 27 | 106 |
| L4-24CE03 | 48 1/8 | 24 | 27 | 132 |
| L5-24CE03 | 59 13/16 | 30 | 27 | 158 |
| L6-24CE03 | 71 1/2 | 36 | 27 | 185 |
| L1-30CE03 | 13 1/16 | 6 | 33 | 56 |
| L2-30CE03 | 24 3/4 | 12 | 33 | 83 |
| L3-30CE03 | 36 7/16 | 18 | 33 | 122 |
| L4-30CE03 | 48 1/8 | 24 | 33 | 150 |
| L5-30CE03 | 59 13/16 | 30 | 33 | 181 |
| L6-30CE03 | 71 1/2 | 36 | 33 | 211 |
| L1-36CE03 | 13 1/16 | 8 | 39 | 64 |
| L2-36CE03 | 24 3/4 | 16 | 39 | 95 |
| L3-36CE03 | 36 7/16 | 24 | 39 | 139 |
| L4-36CE03 | 48 1/8 | 32 | 39 | 175 |
| L5-36CE03 | 59 13/16 | 40 | 39 | 210 |
| L6-36CE03 | 71 1/2 | 48 | 39 | 245 |
| L1-42CE03 | 13 1/16 | 8 | 45 | 71 |
| L2-42CE03 | 24 3/4 | 16 | 45 | 106 |
| L3-42CE03 | 36 7/16 | 24 | 45 | 156 |
| L4-42CE03 | 48 1/8 | 32 | 45 | 194 |
| L5-42CE03 | 59 13/16 | 40 | 45 | 234 |
| L6-42CE03 | 71 1/2 | 48 | 45 | 274 |

Depth on all Legal-Size Sort Modules is 16 7/8".
For open riser, change model # to P
(for pass-through).

## Legal Closed Back, 6" Riser

L4-24CE06

| MODEL # | WIDTH | SLOTS | HEIGHT | WEIGHT |
|---|---|---|---|---|
| L1-18CE06 | 13 1/16 | 6 | 24 | 45 |
| L2-18CE06 | 24 3/4 | 12 | 24 | 67 |
| L3-18CE06 | 36 7/16 | 18 | 24 | 97 |
| L4-18CE06 | 48 1/8 | 24 | 24 | 120 |
| L5-18CE06 | 59 13/16 | 30 | 24 | 145 |
| L6-18CE06 | 71 1/2 | 36 | 24 | 171 |
| L1-24CE06 | 13 1/16 | 6 | 30 | 52 |
| L2-24CE06 | 24 3/4 | 12 | 30 | 77 |
| L3-24CE06 | 36 7/16 | 18 | 30 | 112 |
| L4-24CE06 | 48 1/8 | 24 | 30 | 140 |
| L5-24CE06 | 59 13/16 | 30 | 30 | 169 |
| L6-24CE06 | 71 1/2 | 36 | 30 | 200 |
| L1-30CE06 | 13 1/16 | 6 | 36 | 58 |

## Legal Closed Back, 6" Riser (con't.)

| MODEL # | WIDTH | SLOTs | HEIGHT | WEIGHT |
|---|---|---|---|---|
| L2-30CE06 | 24 3/4 | 12 | 36 | 87 |
| L3-30CE06 | 36 7/16 | 18 | 36 | 128 |
| L4-30CE06 | 48 1/8 | 24 | 36 | 158 |
| L5-30CE06 | 59 13/16 | 30 | 36 | 193 |
| L6-30CE06 | 71 1/2 | 36 | 36 | 227 |
| L1-36CE06 | 13 1/16 | 8 | 42 | 67 |
| L2-36CE06 | 24 3/4 | 16 | 42 | 100 |
| L3-36CE06 | 36 7/16 | 24 | 42 | 146 |
| L4-36CE06 | 48 1/8 | 32 | 42 | 183 |
| L5-36CE06 | 59 13/16 | 40 | 42 | 221 |
| L6-36CE06 | 71 1/2 | 48 | 42 | 261 |
| L1-42CE06 | 13 1/16 | 8 | 48 | 76 |
| L2-42CE06 | 24 3/4 | 16 | 48 | 113 |
| L3-42CE06 | 36 7/16 | 24 | 48 | 166 |
| L4-42CE06 | 48 1/8 | 32 | 48 | 207 |
| L5-42CE06 | 59 13/16 | 40 | 48 | 221 |
| L6-42CE06 | 71 1/2 | 48 | 48 | 237 |

Depth on all Legal-Size Sort Modules is 16 7/8".
For open riser, change model # to P
(for pass-through).

## Legal Closed Back, 12" Riser

L4-30CE12

| MODEL # | WIDTH | SLOTS | HEIGHT | WEIGHT |
|---|---|---|---|---|
| L1-18CE12 | 13 1/16 | 6 | 30 | 52 |
| L2-18CE12 | 24 3/4 | 12 | 30 | 74 |
| L3-18CE12 | 36 7/16 | 18 | 30 | 107 |
| L4-18CE12 | 48 1/8 | 24 | 30 | 131 |
| L5-18CE12 | 59 13/16 | 30 | 30 | 161 |
| L6-18CE12 | 71 1/2 | 36 | 30 | 191 |
| L1-24CE12 | 13 1/16 | 6 | 36 | 59 |
| L2-24CE12 | 24 3/4 | 12 | 36 | 85 |
| L3-24CE12 | 36 7/16 | 18 | 36 | 121 |
| L4-24CE12 | 48 1/8 | 24 | 36 | 150 |
| L5-24CE12 | 59 13/16 | 30 | 36 | 184 |
| L6-24CE12 | 71 1/2 | 36 | 36 | 218 |
| L1-30CE12 | 13 1/16 | 6 | 42 | 65 |
| L2-30CE12 | 24 3/4 | 12 | 42 | 95 |
| L3-30CE12 | 36 7/16 | 18 | 42 | 136 |
| L4-30CE12 | 48 1/8 | 24 | 42 | 169 |
| L5-30CE12 | 59 13/16 | 30 | 42 | 207 |
| L6-30CE12 | 71 1/2 | 36 | 42 | 244 |
| L1-36CE12 | 13 1/16 | 8 | 48 | 70 |
| L2-36CE12 | 24 3/4 | 16 | 48 | 105 |
| L3-36CE12 | 36 7/16 | 24 | 48 | 153 |
| L4-36CE12 | 48 1/8 | 32 | 48 | 189 |
| L5-36CE12 | 59 13/16 | 40 | 48 | 230 |
| L6-36CE12 | 71 1/2 | 48 | 48 | 271 |

Depth on all Legal-Size Sort Modules is 16 7/8".
For open riser, change model # to P
(for pass-through).

## Legal Closed Back, 18" Riser

L4-30CE18

| MODEL # | WIDTH | SLOTS | HEIGHT | WEIGHT |
|---|---|---|---|---|
| L1-18CE18 | 13 1/16 | 6 | 36 | 57 |
| L2-18CE18 | 24 3/4 | 12 | 36 | 81 |
| L3-18CE18 | 36 7/16 | 18 | 36 | 117 |
| L4-18CE18 | 48 1/8 | 24 | 36 | 142 |
| L5-18CE18 | 59 13/16 | 30 | 36 | 176 |
| L6-18CE18 | 71 1/2 | 36 | 36 | 209 |
| L1-24CE18 | 13 1/16 | 6 | 42 | 64 |
| L2-24CE18 | 24 3/4 | 12 | 42 | 91 |
| L3-24CE18 | 36 7/16 | 18 | 42 | 131 |
| L4-24CE18 | 48 1/8 | 24 | 42 | 161 |
| L5-24CE18 | 59 13/16 | 30 | 42 | 198 |
| L6-24CE18 | 71 1/2 | 36 | 42 | 237 |
| L1-30CE18 | 13 1/16 | 6 | 48 | 70 |
| L2-30CE18 | 24 3/4 | 12 | 48 | 101 |
| L3-30CE18 | 36 7/16 | 18 | 48 | 145 |
| L4-30CE18 | 48 1/8 | 24 | 48 | 180 |
| L5-30CE18 | 59 13/16 | 30 | 48 | 221 |
| L6-30CE18 | 71 1/2 | 36 | 48 | 263 |

Depth on all Legal-Size Sort Modules is 16 7/8".
For open riser, change model # to P
(for pass-through).

## Legal Open Back, No Riser

L4-300

| MODEL # | WIDTH | SLOTS | HEIGHT | WEIGHT |
|---|---|---|---|---|
| L1-180 | 13 1/16 | 6 | 18 | 40 |
| L2-180 | 24 3/4 | 12 | 18 | 59 |
| L3-180 | 36 7/16 | 18 | 18 | 87 |
| L4-180 | 48 1/8 | 24 | 18 | 109 |
| L5-180 | 59 13/16 | 30 | 18 | 131 |
| L6-180 | 71 1/2 | 36 | 18 | 153 |
| L1-240 | 13 1/16 | 6 | 24 | 46 |
| L2-240 | 24 3/4 | 12 | 24 | 69 |
| L3-240 | 36 7/16 | 18 | 24 | 103 |
| L4-240 | 48 1/8 | 24 | 24 | 129 |
| L5-240 | 59 13/16 | 30 | 24 | 155 |
| L6-240 | 71 1/2 | 36 | 24 | 182 |
| L1-300 | 13 1/16 | 6 | 30 | 53 |
| L2-300 | 24 3/4 | 12 | 30 | 80 |
| L3-300 | 36 7/16 | 18 | 30 | 119 |
| L4-300 | 48 1/8 | 24 | 30 | 147 |
| L5-300 | 59 13/16 | 30 | 30 | 178 |
| L6-300 | 71 1/2 | 36 | 30 | 208 |
| L1-360 | 13 1/16 | 8 | 36 | 61 |
| L2-360 | 24 3/4 | 16 | 36 | 92 |
| L3-360 | 36 7/16 | 24 | 36 | 136 |
| L4-360 | 48 1/8 | 32 | 36 | 172 |
| L5-360 | 59 13/16 | 40 | 36 | 207 |
| L6-360 | 71 1/2 | 48 | 36 | 242 |
| L1-420 | 13 1/16 | 8 | 42 | 68 |

## Legal Open Back, No Riser (con't.)

| MODEL # | WIDTH | SLOTS | HEIGHT | WEIGHT |
|---|---|---|---|---|
| L2-420 | 24 3/4 | 16 | 42 | 103 |
| L3-420 | 36 7/16 | 24 | 42 | 153 |
| L4-420 | 48 1/8 | 32 | 42 | 191 |
| L5-420 | 59 13/16 | 40 | 42 | 231 |
| L6-420 | 71 1/2 | 48 | 42 | 271 |
| L1-480 | 13 1/16 | 8 | 48 | 76 |
| L2-480 | 24 3/4 | 16 | 48 | 114 |
| L3-480 | 36 7/16 | 24 | 48 | 168 |
| L4-480 | 48 1/8 | 32 | 48 | 210 |
| L5-480 | 59 13/16 | 40 | 48 | 242 |
| L6-480 | 71 1/2 | 48 | 48 | 300 |

Depth on all Legal-Size Sort Modules is 16 7/8″.

## Legal Open Back, 3" Riser

L4-300E03

| MODEL # | WIDTH | SLOTS | HEIGHT | WEIGHT |
|---|---|---|---|---|
| L1-180E03 | 13 1/16 | 6 | 21 | 43 |
| L2-180E03 | 24 3/4 | 12 | 21 | 62 |
| L3-180E03 | 36 7/16 | 18 | 21 | 90 |
| L4-180E03 | 48 1/8 | 24 | 21 | 112 |
| L5-180E03 | 59 13/16 | 30 | 21 | 134 |
| L6-180E03 | 71 1/2 | 36 | 21 | 156 |
| L1-240E03 | 13 1/16 | 6 | 27 | 49 |
| L2-240E03 | 24 3/4 | 12 | 27 | 72 |
| L3-240E03 | 36 7/16 | 18 | 27 | 106 |
| L4-24BE03 | 48 1/8 | 24 | 27 | 132 |
| L5-240E03 | 59 13/16 | 30 | 27 | 158 |
| L6-240E03 | 71 1/2 | 36 | 27 | 185 |
| L1-300E03 | 13 1/16 | 6 | 33 | 56 |
| L2-300E03 | 24 3/4 | 12 | 33 | 83 |
| L3-300E03 | 36 7/16 | 18 | 33 | 122 |
| L4-300E03 | 48 1/8 | 24 | 33 | 150 |
| L5-300E03 | 59 13/16 | 30 | 33 | 181 |
| L6-300E03 | 71 1/2 | 36 | 33 | 211 |
| L1-360E03 | 13 1/16 | 8 | 39 | 64 |
| L2-360E03 | 24 3/4 | 16 | 39 | 95 |
| L3-360E03 | 36 7/16 | 24 | 39 | 139 |
| L4-360E03 | 48 1/8 | 32 | 39 | 175 |
| L5-360E03 | 59 13/16 | 40 | 39 | 210 |
| L6-360E03 | 71 1/2 | 48 | 39 | 245 |
| L1-420E03 | 13 1/16 | 8 | 45 | 71 |
| L2-420E03 | 24 3/4 | 16 | 45 | 106 |
| L3-420E03 | 36 7/16 | 24 | 45 | 156 |
| L4-420E03 | 48 1/8 | 32 | 45 | 194 |
| L5-420E03 | 59 13/16 | 40 | 45 | 234 |
| L6-420E03 | 71 1/2 | 48 | 45 | 274 |

Depth on all Legal-Size Sort Modules is 16 7/8″.
Open back risers are not available on open back modules.

## Legal Open Back, 6" Riser

L4-300E06

| MODEL # | WIDTH | SLOTS | HEIGHT | WEIGHT |
|---|---|---|---|---|
| L1-180E06 | 13 1/16 | 6 | 24 | 45 |
| L2-180E06 | 24 3/4 | 12 | 24 | 67 |
| L3-180E06 | 36 7/16 | 18 | 24 | 97 |
| L4-180E06 | 48 1/8 | 24 | 24 | 120 |
| L5-180E06 | 59 13/16 | 30 | 24 | 145 |
| L6-180E06 | 71 1/2 | 36 | 24 | 171 |
| L1-240E06 | 13 1/16 | 6 | 30 | 52 |
| L2-240E06 | 24 3/4 | 12 | 30 | 77 |
| L3-240E06 | 36 7/16 | 18 | 30 | 112 |
| L4-240E06 | 48 1/8 | 24 | 30 | 140 |
| L5-240E06 | 59 13/16 | 30 | 30 | 169 |
| L6-240E06 | 71 1/2 | 36 | 30 | 200 |
| L1-300E06 | 13 1/16 | 6 | 36 | 58 |
| L2-300E06 | 24 3/4 | 12 | 36 | 87 |
| L3-300E06 | 36 7/16 | 18 | 36 | 128 |
| L4-300E06 | 48 1/8 | 24 | 36 | 158 |
| L5-300E06 | 59 13/16 | 30 | 36 | 193 |
| L6-300E06 | 71 1/2 | 36 | 36 | 227 |
| L1-360E06 | 13 1/16 | 8 | 42 | 67 |
| L2-360E06 | 24 3/4 | 16 | 42 | 100 |
| L3-360E06 | 36 7/16 | 24 | 42 | 146 |
| L4-360E06 | 48 1/8 | 32 | 42 | 183 |
| L5-360E06 | 59 13/16 | 40 | 42 | 221 |
| L6-360E06 | 71 1/2 | 48 | 42 | 261 |
| L1-420E06 | 13 1/16 | 8 | 48 | 76 |
| L2-420E06 | 24 3/4 | 16 | 48 | 113 |
| L3-420E06 | 36 7/16 | 24 | 48 | 166 |
| L4-420E06 | 48 1/8 | 32 | 48 | 207 |
| L5-420E06 | 59 13/16 | 40 | 48 | 221 |
| L6-420E06 | 71 1/2 | 48 | 48 | 237 |

Depth on all Legal-Size Sort Modules is 16 7/8″.
Open back risers are not available on open back modules.

## Legal Open Back, 12" Riser

L4-240E12

| MODEL # | WIDTH | SLOTS | HEIGHT | WEIGHT |
|---|---|---|---|---|
| L1-180E12 | 13 1/16 | 6 | 30 | 52 |
| L2-180E12 | 24 3/4 | 12 | 30 | 74 |
| L3-180E12 | 36 7/16 | 18 | 30 | 107 |
| L4-180E12 | 48 1/8 | 24 | 30 | 131 |
| L5-180E12 | 59 13/16 | 30 | 30 | 161 |
| L6-180E12 | 71 1/2 | 36 | 30 | 191 |
| L1-240E12 | 13 1/16 | 6 | 36 | 59 |
| L2-240E12 | 24 3/4 | 12 | 36 | 85 |
| L3-240E12 | 36 7/16 | 18 | 36 | 121 |
| L4-240E12 | 48 1/8 | 24 | 36 | 150 |
| L5-240E12 | 59 13/16 | 30 | 36 | 184 |
| L6-240E12 | 71 1/2 | 36 | 36 | 218 |
| L1-300E12 | 13 1/16 | 6 | 42 | 65 |

## Legal Open Back, 12" Riser (con't.)

| MODEL # | WIDTH | SLOTS | HEIGHT | WEIGHT |
|---|---|---|---|---|
| L2-30OE12 | 24 3/4 | 12 | 42 | 95 |
| L3-30OE12 | 36 7/16 | 18 | 42 | 136 |
| L4-30OE12 | 48 1/8 | 24 | 42 | 169 |
| L5-30OE12 | 59 13/16 | 30 | 42 | 207 |
| L6-30OE12 | 71 1/2 | 36 | 42 | 244 |
| L1-36OE12 | 13 1/16 | 8 | 48 | 70 |
| L2-36OE12 | 24 3/4 | 16 | 48 | 105 |
| L3-36OE12 | 36 7/16 | 24 | 48 | 153 |
| L4-36OE12 | 48 1/8 | 32 | 48 | 189 |
| L5-36OE12 | 59 13/16 | 40 | 48 | 230 |
| L6-36OE12 | 71 1/2 | 48 | 48 | 271 |

Depth on all Legal-Size Sort Modules is 16 7/8".
Open back risers are not available on open back modules.

## Legal Open Back, 18" Riser

L4-30OE18

| MODEL # | WIDTH | SLOTS | HEIGHT | WEIGHT |
|---|---|---|---|---|
| L1-18OE18 | 13 1/16 | 6 | 36 | 57 |
| L2-18OE18 | 24 3/4 | 12 | 36 | 81 |
| L3-18OE18 | 36 7/16 | 18 | 36 | 117 |
| L4-18OE18 | 48 1/8 | 24 | 36 | 142 |
| L5-18OE18 | 59 13/16 | 30 | 36 | 176 |
| L6-18OE18 | 71 1/2 | 36 | 36 | 209 |
| L1-24OE18 | 13 1/16 | 6 | 42 | 64 |
| L2-24OE18 | 24 3/4 | 12 | 42 | 91 |
| L3-24OE18 | 36 7/16 | 18 | 42 | 131 |
| L4-24OE18 | 48 1/8 | 24 | 42 | 161 |
| L5-24OE18 | 59 13/16 | 30 | 42 | 198 |
| L6-24OE18 | 71 1/2 | 36 | 42 | 237 |
| L1-30OE18 | 13 1/16 | 6 | 48 | 70 |
| L2-30OE18 | 24 3/4 | 12 | 48 | 101 |
| L3-30OE18 | 36 7/16 | 18 | 48 | 145 |
| L4-30OE18 | 48 1/8 | 24 | 48 | 180 |
| L5-30OE18 | 59 13/16 | 30 | 48 | 221 |
| L6-30OE18 | 71 1/2 | 36 | 48 | 263 |

Depth on all Legal-Size Sort Modules is 16 7/8".
Open back risers are not available on open back modules.

## Legal Plexiglass Back, No Riser

L4-30P

| MODEL # | WIDTH | SLOTS | HEIGHT | WEIGHT |
|---|---|---|---|---|
| L1-18P | 13 1/16 | 6 | 18 | 40 |
| L2-18P | 24 3/4 | 12 | 18 | 59 |
| L3-18P | 36 7/16 | 18 | 18 | 79 |
| L4-18P | 48 1/8 | 24 | 18 | 99 |
| L5-18P | 59 13/16 | 30 | 18 | 119 |
| L6-18P | 71 1/2 | 36 | 18 | 139 |
| L1-24P | 13 1/16 | 6 | 24 | 46 |
| L2-24P | 24 3/4 | 12 | 24 | 69 |
| L3-24P | 36 7/16 | 18 | 24 | 94 |

## Legal Plexiglass Back, No Riser (con't.)

| MODEL # | WIDTH | SLOTS | HEIGHT | WEIGHT |
|---|---|---|---|---|
| L4-24P | 48 1/8 | 24 | 24 | 117 |
| L5-24P | 59 13/16 | 30 | 24 | 141 |
| L6-24P | 71 1/2 | 36 | 24 | 165 |
| L1-30P | 13 1/16 | 6 | 30 | 53 |
| L2-30P | 24 3/4 | 12 | 30 | 80 |
| L3-30P | 36 7/16 | 18 | 30 | 108 |
| L4-30P | 48 1/8 | 24 | 30 | 134 |
| L5-30P | 59 13/16 | 30 | 30 | 162 |
| L6-30P | 71 1/2 | 36 | 30 | 189 |
| L1-36P | 13 1/16 | 8 | 36 | 61 |
| L2-36P | 24 3/4 | 16 | 36 | 92 |
| L3-36P | 36 7/16 | 24 | 36 | 124 |
| L4-36P | 48 1/8 | 32 | 36 | 156 |
| L5-36P | 59 13/16 | 40 | 36 | 188 |
| L6-36P | 71 1/2 | 48 | 36 | 220 |
| L1-42P | 13 1/16 | 8 | 42 | 68 |
| L2-42P | 24 3/4 | 16 | 42 | 103 |
| L3-42P | 36 7/16 | 24 | 42 | 139 |
| L4-42P | 48 1/8 | 32 | 42 | 174 |
| L5-42P | 59 13/16 | 40 | 42 | 210 |
| L6-42P | 71 1/2 | 48 | 42 | 246 |
| L1-48P | 13 1/16 | 8 | 48 | 76 |
| L2-48P | 24 3/4 | 16 | 48 | 114 |
| L3-48P | 36 7/16 | 24 | 48 | 153 |
| L4-48P | 48 1/8 | 32 | 48 | 191 |
| L5-48P | 59 13/16 | 40 | 48 | 232 |
| L6-48P | 71 1/2 | 48 | 48 | 273 |

Depth on all Legal-Size Sort Modules is 16 7/8".

## Legal Plexiglass Back, 3" Riser

L4-30PE03

| MODEL # | WIDTH | SLOTS | HEIGHT | WEIGHT |
|---|---|---|---|---|
| L1-18PE03 | 13 1/16 | 6 | 21 | 43 |
| L2-18PE03 | 24 3/4 | 12 | 21 | 62 |
| L3-18PE03 | 36 7/16 | 18 | 21 | 82 |
| L4-18PE03 | 48 1/8 | 24 | 21 | 102 |
| L5-18PE03 | 59 13/16 | 30 | 21 | 122 |
| L6-18PE03 | 71 1/2 | 36 | 21 | 142 |
| L1-24PE03 | 13 1/16 | 6 | 27 | 49 |
| L2-24PE03 | 24 3/4 | 12 | 27 | 72 |
| L3-24PE03 | 36 7/16 | 18 | 27 | 97 |
| L4-24PE03 | 48 1/8 | 24 | 27 | 120 |
| L5-24PE03 | 59 13/16 | 30 | 27 | 144 |
| L6-24PE03 | 71 1/2 | 36 | 27 | 168 |
| L1-30PE03 | 13 1/16 | 6 | 33 | 56 |
| L2-30PE03 | 24 3/4 | 12 | 33 | 83 |
| L3-30PE03 | 36 7/16 | 18 | 33 | 111 |
| L4-30PE03 | 48 1/8 | 24 | 33 | 137 |
| L5-30PE03 | 59 13/16 | 30 | 33 | 165 |
| L6-30PE03 | 71 1/2 | 36 | 33 | 192 |

## Legal Plexiglass Back, 3" Riser (con't.)

| MODEL # | WIDTH | SLOTS | HEIGHT | WEIGHT |
|---|---|---|---|---|
| L1-36PE03 | 13 1/16 | 8 | 39 | 64 |
| L2-36PE03 | 24 3/4 | 16 | 39 | 95 |
| L3-36PE03 | 36 7/16 | 24 | 39 | 127 |
| L4-36PE03 | 48 1/8 | 32 | 39 | 159 |
| L5-36PE03 | 59 13/16 | 40 | 39 | 191 |
| L6-36PE03 | 71 1/2 | 48 | 39 | 223 |
| L1-42PE03 | 13 1/16 | 8 | 45 | 71 |
| L2-42PE03 | 24 3/4 | 16 | 45 | 106 |
| L3-42PE03 | 36 7/16 | 24 | 45 | 142 |
| L4-42PE03 | 48 1/8 | 32 | 45 | 177 |
| L5-42PE03 | 59 13/16 | 40 | 45 | 213 |
| L6-42PE03 | 71 1/2 | 48 | 45 | 249 |

Depth on all Legal-Size Sort Modules is 16 7/8".
For open riser, change model # to P
(for pass-through).

## Legal Plexiglass Back, 6" Riser

L4-36PE06

| MODEL # | WIDTH | SLOTS | HEIGHT | WEIGHT |
|---|---|---|---|---|
| L1-18PE06 | 13 1/16 | 6 | 24 | 45 |
| L2-18PE06 | 24 3/4 | 12 | 24 | 67 |
| L3-18PE06 | 36 7/16 | 18 | 24 | 88 |
| L4-18PE06 | 48 1/8 | 24 | 24 | 109 |
| L5-18PE06 | 59 13/16 | 30 | 24 | 132 |
| L6-18PE06 | 71 1/2 | 36 | 24 | 155 |
| L1-24PE06 | 13 1/16 | 6 | 30 | 52 |
| L2-24PE06 | 24 3/4 | 12 | 30 | 77 |
| L3-24PE06 | 36 7/16 | 18 | 30 | 102 |
| L4-24PE06 | 48 1/8 | 24 | 30 | 127 |
| L5-24PE06 | 59 13/16 | 30 | 30 | 154 |
| L6-24PE06 | 71 1/2 | 36 | 30 | 182 |
| L1-30PE06 | 13 1/16 | 6 | 36 | 58 |
| L2-30PE06 | 24 3/4 | 12 | 36 | 87 |
| L3-30PE06 | 36 7/16 | 18 | 36 | 116 |
| L4-30PE06 | 48 1/8 | 24 | 36 | 144 |
| L5-30PE06 | 59 13/16 | 30 | 36 | 175 |
| L6-30PE06 | 71 1/2 | 36 | 36 | 206 |
| L1-36PE06 | 13 1/16 | 8 | 42 | 67 |
| L2-36PE06 | 24 3/4 | 16 | 42 | 100 |
| L3-36PE06 | 36 7/16 | 24 | 42 | 133 |
| L4-36PE06 | 48 1/8 | 32 | 42 | 166 |
| L5-36PE06 | 59 13/16 | 40 | 42 | 201 |
| L6-36PE06 | 71 1/2 | 48 | 42 | 237 |
| L1-42PE06 | 13 1/16 | 8 | 48 | 76 |
| L2-42PE06 | 24 3/4 | 16 | 48 | 113 |
| L3-42PE06 | 36 7/16 | 24 | 48 | 151 |
| L4-42PE06 | 48 1/8 | 32 | 48 | 288 |
| L5-42PE06 | 59 13/16 | 40 | 48 | 228 |
| L6-42PE06 | 71 1/2 | 48 | 48 | 267 |

Depth on all Legal-Size Sort Modules is 16 7/8".
For open riser, change model # to P
(for pass-through).

## Legal Plexiglass Back, 12" Riser

L4-30PE12

| MODEL # | WIDTH | SLOTS | HEIGHT | WEIGHT |
|---|---|---|---|---|
| L1-18PE12 | 13 1/16 | 6 | 30 | 52 |
| L2-18PE12 | 24 3/4 | 12 | 30 | 74 |
| L3-18PE12 | 36 7/16 | 18 | 30 | 97 |
| L4-18PE12 | 48 1/8 | 24 | 30 | 119 |
| L5-18PE12 | 59 13/16 | 30 | 30 | 146 |
| L6-18PE12 | 71 1/2 | 36 | 30 | 174 |
| L1-24PE12 | 13 1/16 | 6 | 36 | 59 |
| L2-24PE12 | 24 3/4 | 12 | 36 | 85 |
| L3-24PE12 | 36 7/16 | 18 | 36 | 110 |
| L4-24PE12 | 48 1/8 | 24 | 36 | 136 |
| L5-24PE12 | 59 13/16 | 30 | 36 | 167 |
| L6-24PE12 | 71 1/2 | 36 | 36 | 198 |
| L1-30PE12 | 13 1/16 | 6 | 42 | 65 |
| L2-30PE12 | 24 3/4 | 12 | 42 | 95 |
| L3-30PE12 | 36 7/16 | 18 | 42 | 124 |
| L4-30PE12 | 48 1/8 | 24 | 42 | 154 |
| L5-30PE12 | 59 13/16 | 30 | 42 | 188 |
| L6-30PE12 | 71 1/2 | 36 | 42 | 222 |
| L1-36PE12 | 13 1/16 | 8 | 48 | 70 |
| L2-36PE12 | 24 3/4 | 16 | 48 | 105 |
| L3-36PE12 | 36 7/16 | 24 | 48 | 139 |
| L4-36PE12 | 48 1/8 | 32 | 48 | 172 |
| L5-36PE12 | 59 13/16 | 40 | 48 | 209 |
| L6-36PE12 | 71 1/2 | 48 | 48 | 246 |

Depth on all Legal-Size Sort Modules is 16 7/8".
For open riser, change model # to P
(for pass-through).

## Legal Plexiglass Back, 18" Riser

L4-30PE18

| MODEL # | WIDTH | SLOTS | HEIGHT | WEIGHT |
|---|---|---|---|---|
| L1-18PE18 | 13 1/16 | 6 | 36 | 57 |
| L2-18PE18 | 24 3/4 | 12 | 36 | 81 |
| L3-18PE18 | 36 77/16 | 18 | 36 | 106 |
| L4-18PE18 | 48 1/8 | 24 | 36 | 129 |
| L5-18PE18 | 59 13/16 | 30 | 36 | 160 |
| L6-18PE18 | 71 1/2 | 36 | 36 | 190 |
| L1-24PE18 | 13 1/16 | 6 | 42 | 72 |
| L2-24PE18 | 24 3/4 | 12 | 42 | 91 |
| L3-24PE18 | 36 7/16 | 18 | 42 | 111 |
| L4-24PE18 | 48 1/8 | 24 | 42 | 146 |
| L5-24PE18 | 59 13/16 | 30 | 42 | 180 |
| L6-24PE18 | 71 1/2 | 36 | 42 | 215 |
| L1-30PE18 | 13 1/16 | 6 | 48 | 79 |
| L2-30PE18 | 24 3/4 | 12 | 48 | 98 |
| L3-30PE18 | 36 7/16 | 18 | 48 | 117 |
| L4-30PE18 | 48 1/8 | 24 | 48 | 164 |
| L5-30PE18 | 59 13/16 | 30 | 48 | 201 |
| L6-30PE18 | 71 1/2 | 36 | 48 | 239 |

Depth on all Legal-Size Sort Modules is 16 7/8".
For open riser, change model # to P
(for pass-through).

## Oversize Closed Back, No Riser

04-36C

| MODEL # | WIDTH | SLOTS | HEIGHT | WEIGHT |
|---|---|---|---|---|
| 01-18C | 15 1/16 | 6 | 18 | 42 |
| 02-18C | 28 3/4 | 12 | 18 | 65 |
| 03-18C | 42 7/16 | 18 | 18 | 97 |
| 04-18C | 56 1/8 | 24 | 18 | 121 |
| 05-18C | 69 13/16 | 30 | 18 | 146 |
| 06-18C | 83 1/2 | 36 | 18 | 172 |
| 01-24C | 15 1/16 | 6 | 24 | 50 |
| 02-24C | 28 3/4 | 12 | 24 | 76 |
| 03-24C | 42 7/16 | 18 | 24 | 112 |
| 04-24C | 56 1/8 | 24 | 24 | 142 |
| 05-24C | 69 13/16 | 30 | 24 | 172 |
| 06-24C | 83 1/2 | 36 | 24 | 202 |
| 01-30C | 15 1/16 | 6 | 30 | 56 |
| 02-30C | 28 3/4 | 12 | 30 | 87 |
| 03-30C | 42 7/16 | 18 | 30 | 130 |
| 04-30C | 56 1/8 | 24 | 30 | 162 |
| 05-30C | 69 13/16 | 30 | 30 | 196 |
| 06-30C | 83 1/2 | 36 | 30 | 230 |
| 01-36C | 15 1/16 | 8 | 36 | 64 |
| 02-36C | 28 3/4 | 16 | 36 | 100 |
| 03-36C | 42 7/16 | 24 | 36 | 150 |
| 04-36C | 56 1/8 | 32 | 36 | 190 |
| 05-36C | 69 13/16 | 40 | 36 | 229 |
| 06-36C | 83 1/2 | 48 | 36 | 267 |
| 01-42C | 15 1/16 | 8 | 42 | 72 |
| 02-42C | 28 3/4 | 16 | 42 | 111 |
| 03-42C | 42 7/16 | 24 | 42 | 166 |
| 04-42C | 56 1/8 | 32 | 42 | 210 |
| 05-42C | 69 13/16 | 40 | 42 | 254 |
| 06-42C | 83 1/2 | 48 | 42 | 298 |
| 01-48C | 15 1/16 | 8 | 48 | 99 |
| 02-48C | 28 3/4 | 16 | 48 | 129 |
| 03-48C | 42 7/16 | 24 | 48 | 182 |
| 04-48C | 56 1/8 | 32 | 48 | 231 |
| 05-48C | 69 13/16 | 40 | 48 | 279 |
| 06-48C | 83 1/2 | 48 | 48 | 328 |

Depth on all Oversize Sort Modules is 16 7/8″.

## Oversize Closed Back, 3” Riser

04-30CE03

| MODEL # | WIDTH | SLOTS | HEIGHT | WEIGHT |
|---|---|---|---|---|
| 01-18CE03 | 15 1/16 | 6 | 21 | 45 |
| 02-18CE03 | 28 3/4 | 12 | 21 | 68 |
| 03-18CE03 | 42 7/16 | 18 | 21 | 100 |
| 04-18CE03 | 56 1/8 | 24 | 21 | 124 |
| 05-18CE03 | 69 13/16 | 30 | 21 | 149 |
| 06-18CE03 | 83 1/2 | 36 | 21 | 175 |
| 01-24CE03 | 15 1/16 | 6 | 27 | 53 |
| 02-24CE03 | 28 3/4 | 12 | 27 | 79 |

## Oversize Closed Back, 3” Riser (con’t.)

| MODEL # | WIDTH | SLOTS | HEIGHT | WEIGHT |
|---|---|---|---|---|
| 03-24CE03 | 42 7/16 | 18 | 27 | 115 |
| 04-24CE03 | 56 1/8 | 24 | 27 | 145 |
| 05-24CE03 | 69 13/16 | 30 | 27 | 175 |
| 06-24CE03 | 83 1/2 | 36 | 27 | 205 |
| 01-30CE03 | 15 1/16 | 6 | 33 | 59 |
| 02-30CE03 | 28 3/4 | 12 | 33 | 90 |
| 03-30CE03 | 42 7/16 | 18 | 33 | 133 |
| 04-30CE03 | 56 1/8 | 24 | 33 | 165 |
| 05-30CE03 | 69 13/16 | 30 | 33 | 199 |
| 06-30CE03 | 83 1/2 | 36 | 33 | 233 |
| 01-36CE03 | 15 1/16 | 8 | 39 | 67 |
| 02-36CE03 | 28 3/4 | 16 | 39 | 103 |
| 03-36CE03 | 42 7/16 | 24 | 39 | 153 |
| 04-36CE03 | 56 1/8 | 32 | 39 | 193 |
| 05-36CE03 | 69 13/16 | 40 | 39 | 232 |
| 06-36CE03 | 83 1/2 | 48 | 39 | 270 |
| 01-42CE03 | 15 1/16 | 8 | 45 | 75 |
| 02-42CE03 | 28 3/4 | 16 | 45 | 114 |
| 03-42CE03 | 42 7/16 | 24 | 45 | 169 |
| 04-42CE03 | 56 1/8 | 32 | 45 | 213 |
| 05-42CE03 | 69 13/16 | 40 | 45 | 257 |
| 06-42CE03 | 83 1/2 | 48 | 45 | 301 |

Depth on all Oversize Sort Modules is 16 7/8″.
For open riser, change model # to P
(for pass-through).

## Oversize Closed Back, 6” Riser

04-30CE06

| MODEL # | WIDTH | SLOTS | HEIGHT | WEIGHT |
|---|---|---|---|---|
| 01-18CE06 | 15 1/16 | 6 | 24 | 48 |
| 02-18CE06 | 28 3/4 | 12 | 24 | 73 |
| 03-18CE06 | 42 7/16 | 18 | 24 | 107 |
| 04-18CE06 | 56 1/8 | 24 | 24 | 135 |
| 05-18CE06 | 69 13/16 | 30 | 24 | 162 |
| 06-18CE06 | 83 1/2 | 36 | 24 | 189 |
| 01-24CE06 | 15 1/16 | 6 | 30 | 55 |
| 02-24CE06 | 28 3/4 | 12 | 30 | 84 |
| 03-24CE06 | 42 7/16 | 18 | 30 | 123 |
| 04-24CE06 | 56 1/8 | 24 | 30 | 156 |
| 05-24CE06 | 69 13/16 | 30 | 30 | 188 |
| 06-24CE06 | 83 1/2 | 36 | 30 | 219 |
| 01-30CE06 | 15 1/16 | 6 | 36 | 63 |
| 02-30CE06 | 28 3/4 | 12 | 36 | 95 |
| 03-30CE06 | 42 7/16 | 18 | 36 | 140 |
| 04-30CE06 | 56 1/8 | 24 | 36 | 177 |
| 05-30CE06 | 69 13/16 | 30 | 36 | 212 |
| 06-30CE06 | 83 1/2 | 36 | 36 | 246 |
| 01-36CE06 | 15 1/16 | 8 | 42 | 69 |
| 02-36CE06 | 28 3/4 | 16 | 42 | 108 |
| 03-36CE06 | 42 7/16 | 24 | 42 | 161 |

## Oversize Closed Back, 6" Riser (con't.)

| MODEL # | WIDTH | SLOTS | HEIGHT | WEIGHT |
|---|---|---|---|---|
| 04-36CE06 | 56 1/8 | 32 | 42 | 204 |
| 05-36CE06 | 69 13/16 | 40 | 42 | 245 |
| 06-36CE06 | 83 1/2 | 48 | 42 | 288 |
| 01-42CE06 | 15 1/16 | 8 | 48 | 76 |
| 02-42CE06 | 28 3/4 | 16 | 48 | 121 |
| 03-42CE06 | 42 7/16 | 24 | 48 | 183 |
| 04-42CE06 | 56 1/8 | 32 | 48 | 230 |
| 05-42CE06 | 69 13/16 | 40 | 48 | 245 |
| 06-42CE06 | 83 1/2 | 48 | 48 | 262 |

Depth on all Oversize Sort Modules is 16 7/8".
For open riser, change model # to P
(for pass-through).

## Oversize Closed Back, 12" Riser

04-30CE12

| MODEL # | WIDTH | SLOTS | HEIGHT | WEIGHT |
|---|---|---|---|---|
| 01-18CE12 | 15 1/16 | 6 | 30 | 55 |
| 02-18CE12 | 28 3/4 | 12 | 30 | 80 |
| 03-18CE12 | 42 7/16 | 18 | 30 | 118 |
| 04-18CE12 | 56 1/8 | 24 | 30 | 150 |
| 05-18CE12 | 69 13/16 | 30 | 30 | 179 |
| 06-18CE12 | 83 1/2 | 36 | 30 | 208 |
| 01-24CE12 | 15 1/16 | 6 | 36 | 62 |
| 02-24CE12 | 28 3/4 | 12 | 36 | 91 |
| 03-24CE12 | 42 7/16 | 18 | 36 | 133 |
| 04-24CE12 | 56 1/8 | 24 | 36 | 171 |
| 05-24CE12 | 69 13/16 | 30 | 36 | 204 |
| 06-24CE12 | 83 1/2 | 36 | 36 | 237 |
| 01-30CE12 | 15 1/16 | 6 | 42 | 69 |
| 02-30CE12 | 28 3/4 | 12 | 42 | 102 |
| 03-30CE12 | 42 7/16 | 18 | 42 | 149 |
| 04-30CE12 | 56 1/8 | 24 | 42 | 191 |
| 05-30CE12 | 69 13/16 | 30 | 42 | 229 |
| 06-30CE12 | 83 1/2 | 36 | 42 | 266 |
| 01-36CE12 | 15 1/16 | 8 | 48 | 77 |
| 02-36CE12 | 28 3/4 | 16 | 48 | 113 |
| 03-36CE12 | 42 7/16 | 24 | 48 | 165 |
| 04-36CE12 | 56 1/8 | 32 | 48 | 212 |
| 05-36CE12 | 69 13/16 | 40 | 48 | 254 |
| 06-36CE12 | 83 1/2 | 48 | 48 | 297 |

Depth on all Oversize Sort Modules is 16 7/8".
For open riser, change model # to P (for pass-through)
at no additional charge.

## Oversize Closed Back, 18" Riser

04-24CE18

| MODEL # | WIDTH | SLOTS | HEIGHT | WEIGHT |
|---|---|---|---|---|
| 01-18CE18 | 15 1/16 | 6 | 36 | 61 |
| 02-18CE18 | 28 3/4 | 12 | 36 | 88 |
| 03-18CE18 | 42 7/16 | 18 | 36 | 128 |
| 04-18CE18 | 56 1/8 | 24 | 36 | 165 |

## Oversize Closed Back, 18" Riser (con't.)

| MODEL # | WIDTH | SLOTS | HEIGHT | WEIGHT |
|---|---|---|---|---|
| 05-18CE18 | 69 13/16 | 30 | 36 | 195 |
| 06-18CE18 | 83 1/2 | 36 | 36 | 226 |
| 01-24CE18 | 15 1/16 | 6 | 42 | 67 |
| 02-24CE18 | 28 3/4 | 12 | 42 | 99 |
| 03-24CE18 | 42 7/16 | 18 | 42 | 144 |
| 04-24CE18 | 56 1/8 | 24 | 42 | 185 |
| 05-24CE18 | 69 13/16 | 30 | 42 | 220 |
| 06-24CE18 | 83 1/2 | 36 | 42 | 255 |
| 01-30CE18 | 15 1/16 | 6 | 48 | 74 |
| 02-30CE18 | 28 3/4 | 12 | 48 | 110 |
| 03-30CE18 | 42 7/16 | 18 | 48 | 161 |
| 04-30CE18 | 56 1/8 | 24 | 48 | 206 |
| 05-30CE18 | 69 13/16 | 30 | 48 | 245 |
| 06-30CE18 | 83 1/2 | 36 | 48 | 286 |

Depth on all Oversize Sort Modules is 16 7/8".
For open riser, change model # to P
(for pass-through).

## Oversize Open Back, No Riser

04-360

| MODEL # | WIDTH | SLOTS | HEIGHT | WEIGHT |
|---|---|---|---|---|
| 01-180 | 15 1/16 | 6 | 18 | 42 |
| 02-180 | 28 3/4 | 12 | 18 | 65 |
| 03-180 | 42 7/16 | 18 | 18 | 97 |
| 04-180 | 56 1/8 | 24 | 18 | 121 |
| 05-180 | 69 13/16 | 30 | 18 | 146 |
| 06-180 | 83 1/2 | 36 | 18 | 172 |
| 01-240 | 15 1/16 | 6 | 24 | 50 |
| 02-240 | 28 3/4 | 12 | 24 | 76 |
| 03-240 | 42 7/16 | 18 | 24 | 112 |
| 04-240 | 56 1/8 | 24 | 24 | 142 |
| 05-240 | 69 13/16 | 30 | 24 | 172 |
| 06-240 | 83 1/2 | 36 | 24 | 202 |
| 01-300 | 15 1/16 | 6 | 30 | 56 |
| 02-300 | 28 3/4 | 12 | 30 | 87 |
| 03-300 | 42 7/16 | 18 | 30 | 130 |
| 04-300 | 56 1/8 | 24 | 30 | 162 |
| 05-300 | 69 13/16 | 30 | 30 | 196 |
| 06-300 | 83 1/2 | 36 | 30 | 230 |
| 01-360 | 15 1/16 | 8 | 36 | 64 |
| 02-360 | 28 3/4 | 16 | 36 | 100 |
| 03-360 | 42 7/16 | 24 | 36 | 150 |
| 04-360 | 56 1/8 | 32 | 36 | 190 |
| 05-360 | 69 13/16 | 40 | 36 | 229 |
| 06-360 | 83 1/2 | 48 | 36 | 267 |
| 01-420 | 15 1/16 | 8 | 42 | 72 |
| 02-420 | 28 3/4 | 16 | 42 | 111 |
| 03-420 | 42 7/16 | 24 | 42 | 166 |

## Oversize Open Back, No Riser (con't.)

| MODEL # | WIDTH | SLOTS | HEIGHT | WEIGHT |
|---|---|---|---|---|
| 04-420 | 56 1/8 | 32 | 42 | 210 |
| 05-420 | 69 13/16 | 40 | 42 | 254 |
| 06-420 | 83 1/2 | 48 | 42 | 298 |
| 01-480 | 15 1/16 | 8 | 48 | 99 |
| 02-480 | 28 3/4 | 16 | 48 | 129 |
| 03-480 | 42 7/16 | 24 | 48 | 182 |
| 04-480 | 56 1/8 | 32 | 48 | 231 |
| 05-480 | 69 13/16 | 40 | 48 | 279 |
| 06-480 | 83 1/2 | 48 | 48 | 328 |

Depth on all Oversize Sort Modules is 16 7/8″.
For open riser, change model # to P
(for pass-through).

## Oversize Open Back, 3" Riser

04-300E03

| MODEL # | WIDTH | SLOTS | HEIGHT | WEIGHT |
|---|---|---|---|---|
| 01-180E03 | 15 1/16 | 6 | 21 | 45 |
| 02-180E03 | 28 3/4 | 12 | 21 | 68 |
| 03-180E03 | 42 7/16 | 18 | 21 | 100 |
| 04-180E03 | 56 1/8 | 24 | 21 | 124 |
| 05-180E03 | 69 13/16 | 30 | 21 | 149 |
| 06-180E03 | 83 1/2 | 36 | 21 | 175 |
| 01-240E03 | 15 1/16 | 6 | 27 | 53 |
| 02-240E03 | 28 3/4 | 12 | 27 | 79 |
| 03-240E03 | 42 7/16 | 18 | 27 | 115 |
| 04-240E03 | 56 1/8 | 24 | 27 | 145 |
| 05-240E03 | 69 13/16 | 30 | 27 | 175 |
| 06-240E03 | 83 1/2 | 36 | 27 | 205 |
| 01-300E03 | 15 1/16 | 6 | 33 | 59 |
| 02-300E03 | 28 3/4 | 12 | 33 | 90 |
| 03-300E03 | 42 7/16 | 18 | 33 | 133 |
| 04-300E03 | 56 1/8 | 24 | 33 | 165 |
| 05-300E03 | 69 13/16 | 30 | 33 | 199 |
| 06-300E03 | 83 1/2 | 36 | 33 | 233 |
| 01-360E03 | 15 1/16 | 8 | 39 | 67 |
| 02-360E03 | 28 3/4 | 16 | 39 | 103 |
| 03-360E03 | 42 7/16 | 24 | 39 | 153 |
| 04-360E03 | 56 1/8 | 32 | 39 | 193 |
| 05-360E03 | 69 13/16 | 40 | 39 | 232 |
| 06-360E03 | 83 1/2 | 48 | 39 | 270 |
| 01-420E03 | 15 1/16 | 8 | 45 | 75 |
| 02-420E03 | 28 3/4 | 16 | 45 | 114 |
| 03-420E03 | 42 7/16 | 24 | 45 | 169 |
| 04-420E03 | 56 1/8 | 32 | 45 | 213 |
| 05-420E03 | 69 13/16 | 40 | 45 | 257 |
| 06-420E03 | 83 1/2 | 48 | 45 | 301 |

Depth on all Oversize Sort Modules is 16 7/8″.
For open riser, change model # to P
(for pass-through).

## Oversize Open Back, 6" Riser

04-300E06

| MODEL # | WIDTH | SLOTS | HEIGHT | WEIGHT |
|---|---|---|---|---|
| 01-180E06 | 15 1/16 | 6 | 24 | 48 |
| 02-180E06 | 28 3/4 | 12 | 24 | 73 |
| 03-180E06 | 42 7/16 | 18 | 24 | 107 |
| 04-180E06 | 56 1/8 | 24 | 24 | 135 |
| 05-180E06 | 69 13/16 | 30 | 24 | 162 |
| 06-180E06 | 83 1/2 | 36 | 24 | 189 |
| 01-240E06 | 15 1/16 | 6 | 30 | 55 |
| 02-240oE6 | 28 3/4 | 12 | 30 | 84 |
| 03-240E06 | 42 7/16 | 18 | 30 | 123 |
| 04-240E06 | 56 1/8 | 24 | 30 | 156 |
| 05-240E06 | 69 13/16 | 30 | 30 | 188 |
| 06-240E06 | 83 1/2 | 36 | 30 | 219 |
| 01-300E06 | 15 1/16 | 6 | 36 | 63 |
| 02-300E06 | 28 3/4 | 12 | 36 | 95 |
| 03-300E06 | 42 7/16 | 18 | 36 | 140 |
| 04-300E06 | 56 1/8 | 24 | 36 | 177 |
| 05-300E06 | 69 13/16 | 30 | 36 | 212 |
| 06-300E06 | 83 1/2 | 36 | 36 | 246 |
| 01-360E06 | 15 1/16 | 8 | 42 | 69 |
| 02-360E06 | 28 3/4 | 16 | 42 | 108 |
| 03-360E06 | 42 7/16 | 24 | 42 | 161 |
| 04-360E06 | 56 1/8 | 32 | 42 | 204 |
| 05-360E06 | 69 13/16 | 40 | 42 | 245 |
| 06-360E06 | 83 1/2 | 48 | 42 | 288 |
| 01-420E06 | 15 1/16 | 8 | 48 | 76 |
| 02-420E06 | 28 3/4 | 16 | 48 | 121 |
| 03-420E06 | 42 7/16 | 24 | 48 | 183 |
| 04-420E06 | 56 1/8 | 32 | 48 | 230 |
| 05-420E06 | 69 13/16 | 40 | 48 | 245 |
| 06-420E06 | 83 1/2 | 48 | 48 | 262 |

Depth on all Oversize Sort Modules is 16 7/8″.
For open riser, change model # to P
(for pass-through).

## Oversize Open Back, 12" Riser

04-30OE12

| MODEL # | WIDTH | SLOTS | HEIGHT | WEIGHT |
|---|---|---|---|---|
| 01-18OE12 | 15 1/16 | 6 | 30 | 55 |
| 02-18OE12 | 28 3/4 | 12 | 30 | 80 |
| 03-18OE12 | 42 7/16 | 18 | 30 | 118 |
| 04-18OE12 | 56 1/8 | 24 | 30 | 150 |
| 05-18OE12 | 69 13/16 | 30 | 30 | 179 |
| 06-18OE12 | 83 1/2 | 36 | 30 | 208 |
| 01-24OE12 | 15 1/16 | 6 | 36 | 62 |
| 02-24OE12 | 28 3/4 | 12 | 36 | 91 |
| 03-24OE12 | 42 7/16 | 18 | 36 | 133 |
| 04-24OE12 | 56 1/8 | 24 | 36 | 171 |
| 05-24OE12 | 69 13/16 | 30 | 36 | 204 |
| 06-24OE12 | 83 1/2 | 36 | 36 | 237 |
| 01-30OE12 | 15 1/16 | 6 | 42 | 69 |
| 02-30OE12 | 28 3/4 | 12 | 42 | 102 |
| 03-30OE12 | 42 7/16 | 18 | 42 | 149 |
| 04-30OE12 | 56 1/8 | 24 | 42 | 191 |
| 05-30OE12 | 69 13/16 | 30 | 42 | 229 |
| 06-30OE12 | 83 1/2 | 36 | 42 | 266 |
| 01-36OE12 | 15 1/16 | 8 | 48 | 77 |
| 02-36OE12 | 28 3/4 | 16 | 48 | 113 |
| 03-36OE12 | 42 7/16 | 24 | 48 | 165 |
| 04-36OE12 | 56 1/8 | 32 | 48 | 212 |
| 05-36OE12 | 69 13/16 | 40 | 48 | 254 |
| 06-36OE12 | 83 1/2 | 48 | 48 | 297 |

Depth on all Oversize Sort Modules is 16 7/8".
For open riser, change model # to P
(for pass-through).

## Oversize Open Back, 18" Riser

04-24OE18

| MODEL # | WIDTH | SLOTS | HEIGHT | WEIGHT |
|---|---|---|---|---|
| 01-18OE18 | 15 1/16 | 6 | 36 | 61 |
| 02-18OE18 | 28 3/4 | 12 | 36 | 88 |
| 03-18OE18 | 42 7/16 | 18 | 36 | 128 |
| 04-18OE18 | 56 1/8 | 24 | 36 | 165 |
| 05-18OE18 | 69 13/16 | 30 | 36 | 195 |
| 06-18OE18 | 83 1/2 | 36 | 36 | 226 |
| 01-24OE18 | 15 1/16 | 6 | 42 | 67 |
| 02-24OE18 | 28 3/4 | 12 | 42 | 99 |
| 03-24OE18 | 42 7/16 | 18 | 42 | 144 |
| 04-24OE18 | 56 1/8 | 24 | 42 | 185 |
| 05-24OE18 | 69 13/16 | 30 | 42 | 220 |
| 06-24OE18 | 83 1/2 | 36 | 42 | 255 |
| 01-30OE18 | 15 1/16 | 6 | 48 | 74 |
| 02-30OE18 | 28 3/4 | 12 | 48 | 110 |
| 03-30OE18 | 42 7/16 | 18 | 48 | 161 |

## Oversize Open Back, 18" Riser (con't.)

| MODEL # | WIDTH | SLOTS | HEIGHT | WEIGHT |
|---|---|---|---|---|
| 04-30OE18 | 56 1/8 | 24 | 48 | 206 |
| 05-30OE18 | 69 13/16 | 30 | 48 | 245 |
| 06-30OE18 | 83 1/2 | 36 | 48 | 286 |

Depth on all Oversize Sort Modules is 16 7/8".
For open riser, change model # to P
(for pass-through).

## Oversize Plexiglass Back, No Riser

04-36P

| MODEL # | WIDTH | SLOTS | HEIGHT | WEIGHT |
|---|---|---|---|---|
| 01-18P | 15 1/16 | 6 | 18 | 42 |
| 02-18P | 28 3/4 | 12 | 18 | 65 |
| 03-18P | 42 7/16 | 18 | 18 | 88 |
| 04-18P | 56 1/8 | 24 | 18 | 110 |
| 05-18P | 69 13/16 | 30 | 18 | 133 |
| 06-18P | 83 1/2 | 36 | 18 | 156 |
| 01-24P | 15 1/16 | 6 | 24 | 50 |
| 02-24P | 28 3/4 | 12 | 24 | 76 |
| 03-24P | 42 7/16 | 18 | 24 | 102 |
| 04-24P | 56 1/8 | 24 | 24 | 129 |
| 05-24P | 69 13/16 | 30 | 24 | 156 |
| 06-24P | 83 1/2 | 36 | 24 | 184 |
| 01-30P | 15 1/16 | 6 | 30 | 56 |
| 02-30P | 28 3/4 | 12 | 30 | 87 |
| 03-30P | 42 7/16 | 18 | 30 | 118 |
| 04-30P | 56 1/8 | 24 | 30 | 147 |
| 05-30P | 69 13/16 | 30 | 30 | 178 |
| 06-30P | 83 1/2 | 36 | 30 | 209 |
| 01-36P | 15 1/16 | 8 | 36 | 64 |
| 02-36P | 28 3/4 | 16 | 36 | 100 |
| 03-36P | 42 7/16 | 24 | 36 | 136 |
| 04-36P | 56 1/8 | 32 | 36 | 173 |
| 05-36P | 69 13/16 | 40 | 36 | 208 |
| 06-36P | 83 1/2 | 48 | 36 | 243 |
| 01-42P | 15 1/16 | 8 | 42 | 72 |
| 02-42P | 28 3/4 | 16 | 42 | 111 |
| 03-42P | 42 7/16 | 24 | 42 | 151 |
| 04-42P | 56 1/8 | 32 | 42 | 191 |
| 05-42P | 69 13/16 | 40 | 42 | 231 |
| 06-42P | 83 1/2 | 48 | 42 | 271 |
| 01-48P | 15 1/16 | 8 | 48 | 79 |
| 02-48P | 28 3/4 | 16 | 48 | 122 |
| 03-48P | 42 7/16 | 24 | 48 | 165 |
| 04-48P | 56 1/8 | 32 | 48 | 210 |
| 05-48P | 69 13/16 | 40 | 48 | 254 |
| 06-48P | 83 1/2 | 48 | 48 | 298 |

Depth on all Oversize Sort Modules is 16 7/8".

## Oversize Plexiglass Back, 3" Riser

04-36PE03

| MODEL # | WIDTH | SLOTS | HEIGHT | WEIGHT |
|---|---|---|---|---|
| 01-18PE03 | 15 1/16 | 6 | 21 | 45 |
| 02-18PE03 | 28 3/4 | 12 | 21 | 68 |
| 03-18PE03 | 42 7/16 | 18 | 21 | 91 |
| 04-18PE0 | 56 1/8 | 24 | 21 | 113 |
| 05-18PE03 | 69 13/16 | 30 | 21 | 136 |
| 06-18PE03 | 83 1/2 | 36 | 21 | 159 |
| 01-24PE03 | 15 1/16 | 6 | 27 | 53 |
| 02-24PE03 | 28 3/4 | 12 | 27 | 79 |
| 03-24PE03 | 42 7/16 | 18 | 27 | 105 |
| 04-24PE03 | 56 1/8 | 24 | 27 | 132 |
| 05-24PE03 | 69 13/16 | 30 | 27 | 159 |
| 06-24PE03 | 83 1/2 | 36 | 27 | 187 |
| 01-30PE03 | 15 1/16 | 6 | 33 | 59 |
| 02-30PE03 | 28 3/4 | 12 | 33 | 90 |
| 03-30PE03 | 42 7/16 | 18 | 33 | 121 |
| 04-30PE03 | 56 1/8 | 24 | 33 | 150 |
| 05-30PE03 | 69 13/16 | 30 | 33 | 181 |
| 06-30PE03 | 83 1/2 | 36 | 33 | 212 |
| 01-36PE03 | 15 1/16 | 8 | 39 | 67 |
| 02-36PE03 | 28 3/4 | 16 | 39 | 103 |
| 03-36PE03 | 42 7/16 | 24 | 39 | 139 |
| 04-36PE03 | 56 1/8 | 32 | 39 | 176 |
| 05-36PE03 | 69 13/16 | 40 | 39 | 211 |
| 06-36PE03 | 83 1/2 | 48 | 39 | 246 |
| 01-42PE03 | 15 1/16 | 8 | 45 | 75 |
| 02-42PE03 | 28 3/4 | 16 | 45 | 114 |
| 03-42PE03 | 42 7/16 | 24 | 45 | 154 |
| 04-42PE03 | 56 1/8 | 32 | 45 | 194 |
| 05-42PE03 | 69 13/16 | 40 | 45 | 234 |
| 06-42PE03 | 83 1/2 | 48 | 45 | 274 |

Depth on all Oversize Sort Modules = 16 7/8".
For open riser, change model # to P
(for pass-through).

## Oversize Plexiglass Back, 6" Riser

04-30PE06

| MODEL # | WIDTH | SLOTS | HEIGHT | WEIGHT |
|---|---|---|---|---|
| 01-18PE06 | 15 1/16 | 6 | 24 | 48 |
| 02-18PE06 | 28 3/4 | 12 | 24 | 73 |
| 03-18PE06 | 42 7/16 | 18 | 24 | 97 |
| 04-18PE06 | 56 1/8 | 24 | 24 | 123 |
| 05-18PE06 | 69 13/16 | 30 | 24 | 147 |
| 06-18PE06 | 83 1/2 | 36 | 24 | 172 |
| 01-24PE06 | 15 1/16 | 6 | 30 | 55 |
| 02-24PE06 | 28 3/4 | 12 | 30 | 84 |
| 03-24PE06 | 42 7/16 | 18 | 30 | 112 |
| 04-24PE06 | 56 1/8 | 24 | 30 | 142 |
| 05-24PE06 | 69 13/16 | 30 | 30 | 171 |
| 06-24PE06 | 83 1/2 | 36 | 30 | 199 |
| 01-30PE06 | 15 1/16 | 6 | 36 | 63 |

## Oversize Plexiglass Back, 6" Riser (con't.)

04-30PE06

| MODEL # | WIDTH | SLOTS | HEIGHT | WEIGHT |
|---|---|---|---|---|
| 02-30PE06 | 28 3/4 | 12 | 36 | 95 |
| 03-30PE06 | 42 7/16 | 18 | 36 | 127 |
| 04-30PE06 | 56 1/8 | 24 | 36 | 161 |
| 05-30PE06 | 69 13/16 | 30 | 36 | 193 |
| 06-30PE06 | 83 1/2 | 36 | 36 | 224 |
| 01-36PE06 | 15 1/16 | 8 | 42 | 69 |
| 02-36PE06 | 28 3/4 | 16 | 42 | 108 |
| 03-36PE06 | 42 7/16 | 24 | 42 | 146 |
| 04-36PE06 | 56 1/8 | 32 | 42 | 285 |
| 05-36PE06 | 69 13/16 | 40 | 42 | 223 |
| 06-36PE06 | 83 1/2 | 48 | 42 | 262 |
| 01-42PE06 | 15 1/16 | 8 | 48 | 76 |
| 02-42PE06 | 28 3/4 | 16 | 48 | 121 |
| 03-42PE06 | 42 7/16 | 24 | 48 | 166 |
| 04-42PE06 | 56 1/8 | 32 | 48 | 209 |
| 05-42PE06 | 69 13/16 | 40 | 48 | 254 |
| 06-42PE06 | 83 1/2 | 48 | 48 | 299 |

Depth on all Oversize Sort Modules = 16 7/8".
For open riser, change model # to P
(for pass-through).

## Oversize Plexiglass Back, 12" Riser

04-24PE12

| MODEL # | WIDTH | SLOTS | HEIGHT | WEIGHT |
|---|---|---|---|---|
| 01-18PE12 | 15 1/16 | 6 | 30 | 55 |
| 02-18PE12 | 28 3/4 | 12 | 30 | 80 |
| 03-18PE12 | 42 7/16 | 18 | 30 | 107 |
| 04-18PE12 | 56 1/8 | 24 | 30 | 136 |
| 05-18PE12 | 69 13/16 | 30 | 30 | 163 |
| 06-18PE12 | 83 1/2 | 36 | 30 | 189 |
| 01-24PE12 | 15 1/16 | 6 | 36 | 62 |
| 02-24PE12 | 28 3/4 | 12 | 36 | 91 |
| 03-24PE12 | 42 7/16 | 18 | 36 | 121 |
| 04-24PE12 | 56 1/8 | 24 | 36 | 155 |
| 05-24PE12 | 69 13/16 | 30 | 36 | 185 |
| 06-24PE12 | 83 1/2 | 36 | 36 | 215 |
| 01-30PE12 | 15 1/16 | 6 | 42 | 69 |
| 02-30PE12 | 28 3/4 | 12 | 42 | 102 |
| 03-30PE12 | 42 7/16 | 18 | 42 | 135 |
| 04-30PE12 | 56 1/8 | 24 | 42 | 174 |
| 05-30PE12 | 69 13/16 | 30 | 42 | 208 |
| 06-30PE12 | 83 1/2 | 36 | 42 | 242 |
| 01-36PE12 | 15 1/16 | 8 | 48 | 77 |
| 02-36PE12 | 28 3/4 | 16 | 48 | 113 |
| 03-36PE12 | 42 7/16 | 24 | 48 | 150 |
| 04-36PE12 | 56 1/8 | 32 | 48 | 193 |
| 05-36PE12 | 69 13/16 | 40 | 48 | 231 |
| 06-36PE12 | 83 1/2 | 48 | 48 | 270 |

Depth on all Oversize Sort Modules is 16 7/8".
For open riser, change model # to P
(for pass-through).

## Oversize Plexiglass Back, 18" Riser

O4-30PE18

| MODEL # | WIDTH | SLOTS | HEIGHT | WEIGHT |
|---|---|---|---|---|
| O1-18PE18 | 15 1/16 | 6 | 36 | 61 |
| O2-18PE18 | 28 3/4 | 12 | 36 | 88 |
| O3-18PE18 | 42 7/16 | 18 | 36 | 116 |
| O4-18PE18 | 56 1/8 | 24 | 36 | 150 |
| O5-18PE18 | 69 13/16 | 30 | 36 | 177 |
| O6-18PE18 | 83 1/2 | 36 | 36 | 205 |
| O1-24PE18 | 15 1/16 | 6 | 42 | 77 |
| O2-24PE18 | 28 3/4 | 12 | 42 | 99 |
| O3-24PE18 | 42 7/16 | 18 | 42 | 121 |
| O4-24PE18 | 56 1/8 | 24 | 42 | 168 |
| O5-24PE18 | 69 13/16 | 30 | 42 | 200 |
| O6-24PE18 | 83 1/2 | 36 | 42 | 232 |
| O1-30PE18 | 15 1/16 | 6 | 48 | 72 |
| O2-30PE18 | 28 3/4 | 12 | 48 | 99 |
| O3-30PE18 | 42 7/16 | 18 | 48 | 127 |
| O4-30PE18 | 56 1/8 | 24 | 48 | 187 |
| O5-30PE18 | 69 13/16 | 30 | 48 | 223 |
| O6-30PE18 | 83 1/2 | 36 | 48 | 260 |

Depth on all Oversize Sort Modules is 16 7/8″.
For open riser, change model # to P
(for pass-through).

## Zip Code Closed Back, No Platform

Z6-30C

| MODEL # | WIDTH | SLOTS | HEIGHT | WEIGHT |
|---|---|---|---|---|
| Z2-18C | 15 1/16 | 12 | 18 | 50 |
| Z4-18C | 28 3/4 | 24 | 18 | 80 |
| Z6-18C | 42 7/16 | 36 | 18 | 110 |
| Z8-18C | 56 1/8 | 48 | 18 | 141 |
| Z10-18C | 69 13/16 | 60 | 18 | 171 |
| Z12-18C | 83 1/2 | 72 | 18 | 200 |
| Z2-24C | 15 1/16 | 12 | 24 | 59 |
| Z4-24C | 28 3/4 | 24 | 24 | 96 |
| Z6-24C | 42 7/16 | 36 | 24 | 132 |
| Z8-24C | 56 1/8 | 48 | 24 | 168 |
| Z10-24C | 69 13/16 | 60 | 24 | 205 |
| Z12-24C | 83 1/2 | 72 | 24 | 241 |
| Z2-30C | 15 1/16 | 12 | 30 | 68 |
| Z4-30C | 28 3/4 | 24 | 30 | 111 |
| Z6-30C | 42 7/16 | 36 | 30 | 154 |
| Z8-30C | 56 1/8 | 48 | 30 | 197 |
| Z10-30C | 69 13/16 | 60 | 30 | 239 |
| Z12-30C | 83 1/2 | 72 | 30 | 281 |
| Z2-36C | 15 1/16 | 16 | 36 | 79 |
| Z4-36C | 28 3/4 | 32 | 36 | 130 |

## Zip Code Closed Back, No Platform (con't.)

| MODEL # | WIDTH | SLOTS | HEIGHT | WEIGHT |
|---|---|---|---|---|
| Z6-36C | 42 7/16 | 48 | 36 | 180 |
| Z8-36C | 56 1/8 | 64 | 36 | 231 |
| Z10-36C | 69 13/16 | 80 | 36 | 282 |
| Z12-36C | 83 1/2 | 96 | 36 | 332 |
| Z2-42C | 15 1/16 | 16 | 42 | 90 |
| Z4-42C | 28 3/4 | 32 | 42 | 149 |
| Z6-42C | 42 7/16 | 48 | 42 | 207 |
| Z8-42C | 56 1/8 | 64 | 42 | 265 |
| Z10-42C | 69 13/16 | 80 | 42 | 325 |
| Z12-42C | 83 1/2 | 96 | 42 | 384 |
| Z2-48C | 15 1/16 | 16 | 48 | 101 |
| Z4-48C | 28 3/4 | 32 | 48 | 167 |
| Z6-48C | 42 7/16 | 48 | 48 | 233 |
| Z8-48C | 56 1/8 | 64 | 48 | 299 |
| Z10-48C | 69 13/16 | 80 | 48 | 367 |
| Z12-48C | 83 1/2 | 96 | 48 | 436 |

Depth on all Zip Code Sort Modules is 12 7/8″.

## Zip Code Closed Back, 3" Riser

Z4-30CE03

| MODEL # | WIDTH | SLOTS | HEIGHT | WEIGHT |
|---|---|---|---|---|
| Z2-18CE03 | 15 1/16 | 12 | 21 | 53 |
| Z4-18CE03 | 28 3/4 | 24 | 21 | 83 |
| Z6-18CE03 | 42 7/16 | 36 | 21 | 113 |
| Z8-18CE03 | 56 1/8 | 48 | 21 | 144 |
| Z10-18CE03 | 69 13/16 | 60 | 21 | 174 |
| Z12-18CE03 | 83 1/2 | 72 | 21 | 203 |
| Z2-24CE03 | 15 1/16 | 12 | 27 | 62 |
| Z4-24CE03 | 28 3/4 | 24 | 27 | 99 |
| Z6-24CE03 | 42 7/16 | 36 | 27 | 135 |
| Z8-24CE03 | 56 1/8 | 48 | 27 | 171 |
| Z10-24CE03 | 69 13/16 | 60 | 27 | 208 |
| Z12-24CE03 | 83 1/2 | 72 | 27 | 244 |
| Z2-30CE03 | 15 1/16 | 12 | 33 | 71 |
| Z4-30CE03 | 28 3/4 | 24 | 33 | 114 |
| Z6-30CE03 | 42 7/16 | 36 | 33 | 157 |
| Z8-30CE03 | 56 1/8 | 48 | 33 | 200 |
| Z10-30CE03 | 69 13/16 | 60 | 33 | 242 |
| Z12-30CE03 | 83 1/2 | 72 | 33 | 284 |
| Z2-36CE03 | 15 1/16 | 16 | 39 | 82 |
| Z4-36CE03 | 28 3/4 | 32 | 39 | 133 |
| Z6-36CE03 | 42 7/16 | 48 | 39 | 183 |
| Z8-36CE03 | 56 1/8 | 64 | 39 | 234 |

## Zip Code Closed Back, 3” Riser (con’t.)

| MODEL # | WIDTH | SLOTS | HEIGHT | WEIGHT |
|---|---|---|---|---|
| Z10-36CE03 | 69 13/16 | 80 | 39 | 285 |
| Z12-36CE03 | 83 1/2 | 96 | 39 | 335 |
| Z2-42CE03 | 15 1/16 | 16 | 45 | 93 |
| Z4-42CE03 | 28 3/4 | 32 | 45 | 152 |
| Z6-42CE03 | 42 7/16 | 48 | 45 | 210 |
| Z8-42CE03 | 56 1/8 | 64 | 45 | 268 |
| Z10-42CE03 | 69 13/16 | 80 | 45 | 328 |
| Z12-42CE03 | 83 1/2 | 96 | 45 | 387 |

Depth on all Zip Code Sort Modules is 12 7/8″.
For open riser, change model # to P (for pass-through) at no additional charge.

## Zip Code Closed Back, 6” Riser

z4-36CE06

| MODEL # | WIDTH | SLOTS | HEIGHT | WEIGHT |
|---|---|---|---|---|
| Z2-18CE06 | 15 1/16 | 12 | 24 | 56 |
| Z4-18CE06 | 28 3/4 | 24 | 24 | 88 |
| Z6-18CE06 | 42 7/16 | 36 | 24 | 120 |
| Z8-18CE06 | 56 1/8 | 48 | 24 | 154 |
| Z10-18CE06 | 69 13/16 | 60 | 24 | 185 |
| Z12-18CE06 | 83 1/2 | 72 | 24 | 216 |
| Z2-24CE06 | 15 1/16 | 12 | 30 | 65 |
| Z4-24CE06 | 28 3/4 | 24 | 30 | 103 |
| Z6-24CE06 | 42 7/16 | 36 | 30 | 142 |
| Z8-24CE06 | 56 1/8 | 48 | 30 | 182 |
| Z10-24CE06 | 69 13/16 | 60 | 30 | 219 |
| Z12-24CE06 | 83 1/2 | 72 | 30 | 256 |
| Z2-30CE06 | 15 1/16 | 12 | 36 | 75 |
| Z4-30CE06 | 28 3/4 | 24 | 36 | 119 |
| Z6-30CE06 | 42 7/16 | 36 | 36 | 163 |
| Z8-30CE06 | 56 1/8 | 48 | 36 | 209 |
| Z10-30CE06 | 69 13/16 | 60 | 36 | 253 |
| Z12-30CE06 | 83 1/2 | 72 | 36 | 297 |
| Z2-36CE06 | 15 1/16 | 16 | 42 | 85 |
| Z4-36CE06 | 28 3/4 | 32 | 42 | 138 |
| Z6-36CE06 | 42 7/16 | 48 | 42 | 190 |
| Z8-36CE06 | 56 1/8 | 64 | 42 | 244 |
| Z10-36CE06 | 69 13/16 | 80 | 42 | 296 |
| Z12-36CE06 | 83 1/2 | 96 | 42 | 348 |
| Z2-42CE06 | 15 1/16 | 16 | 48 | 95 |
| Z4-42CE06 | 28 3/4 | 32 | 48 | 156 |
| Z6-42CE06 | 42 7/16 | 48 | 48 | 218 |
| Z8-42CE06 | 56 1/8 | 64 | 48 | 279 |
| Z10-42CE06 | 69 13/16 | 80 | 48 | 339 |
| Z12-42CE06 | 83 1/2 | 96 | 48 | 398 |

Depth on all Zip Code Sort Modules is 12 7/8″.
For open riser, change model # to P (for pass-through).

## Zip Code Closed Back, 12” Riser

Z4-30CE12

| MODEL # | WIDTH | SLOTS | HEIGHT | WEIGHT |
|---|---|---|---|---|
| Z2-18CE12 | 15 1/16 | 12 | 30 | 63 |
| Z4-18CE12 | 28 3/4 | 24 | 30 | 96 |
| Z6-18CE12 | 42 7/16 | 36 | 30 | 129 |
| Z8-18CE12 | 56 1/8 | 48 | 30 | 167 |
| Z10-18CE12 | 69 13/16 | 60 | 30 | 200 |
| Z12-18CE12 | 83 1/2 | 72 | 30 | 233 |
| Z2-24CE12 | 15 1/16 | 12 | 36 | 72 |
| Z4-24CE12 | 28 3/4 | 24 | 36 | 111 |
| Z6-24CE12 | 42 7/16 | 36 | 36 | 151 |
| Z8-24CE12 | 56 1/8 | 48 | 36 | 195 |
| Z10-24CE12 | 69 13/16 | 60 | 36 | 234 |
| Z12-24CE12 | 83 1/2 | 72 | 36 | 274 |
| Z2-30CE12 | 15 1/16 | 12 | 42 | 80 |
| Z4-30CE12 | 28 3/4 | 24 | 42 | 127 |
| Z6-30CE12 | 42 7/16 | 36 | 42 | 173 |
| Z8-30CE12 | 56 1/8 | 48 | 42 | 222 |
| Z10-30CE12 | 69 13/16 | 60 | 42 | 268 |
| Z12-30CE12 | 83 1/2 | 72 | 42 | 315 |
| Z2-36CE12 | 15 1/16 | 16 | 48 | 89 |
| Z4-36CE12 | 28 3/4 | 32 | 48 | 142 |
| Z6-36CE12 | 42 7/16 | 48 | 48 | 195 |
| Z8-36CE12 | 56 1/8 | 64 | 48 | 250 |
| Z10-36CE12 | 69 13/16 | 80 | 48 | 303 |
| Z12-36CE12 | 83 1/2 | 96 | 48 | 355 |

Depth on all Zip Code Sort Modules is 12 7/8″.
For open riser, change model # to P (for pass-through).

## Zip Code Closed Back, 18” Riser

Z4-30CE18

| MODEL # | WIDTH | SLOTS | HEIGHT | WEIGHT |
|---|---|---|---|---|
| Z2-18CE18 | 15 1/16 | 12 | 36 | 68 |
| Z4-18CE18 | 28 3/4 | 24 | 36 | 103 |
| Z6-18CE18 | 42 7/16 | 36 | 36 | 139 |
| Z8-18CE18 | 56 1/8 | 48 | 36 | 180 |
| Z10-18CE18 | 69 13/16 | 60 | 36 | 215 |
| Z12-18CE18 | 83 1/2 | 72 | 36 | 249 |
| Z2-24CE18 | 15 1/16 | 12 | 42 | 54 |
| Z4-24CE18 | 28 3/4 | 24 | 42 | 119 |
| Z6-24CE18 | 42 7/16 | 36 | 42 | 160 |
| Z8-24CE18 | 56 1/8 | 48 | 42 | 208 |
| Z10-24CE18 | 69 13/16 | 60 | 42 | 249 |
| Z12-24CE18 | 83 1/2 | 72 | 42 | 289 |
| Z2-30CE18 | 15 1/16 | 12 | 48 | 88 |
| Z4-30CE18 | 28 3/4 | 24 | 48 | 134 |
| Z6-30CE18 | 42 7/16 | 36 | 48 | 180 |
| Z8-30CE18 | 56 1/8 | 48 | 48 | 235 |
| Z10-30CE18 | 69 13/16 | 60 | 48 | 283 |
| Z12-30CE18 | 83 1/2 | 72 | 48 | 330 |

Depth on all Zip Code Sort Modules is 12 7/8″.
For open riser, change model # to P (for pass-through).

## Standard Reader Station

MCS36L

| MODEL # | OPENING* | HGT | WGT |
|---|---|---|---|
| MCS36C | Centered | 36 | 180 |
| MCS36R | Right | 36 | 180 |
| MCS36L | Left | 36 | 180 |
| MCS42C | Centered | 42 | 200 |
| MCS42R | Right | 42 | 200 |
| MCS42L | Left | 42 | 200 |
| MCS48C | Centered | 48 | 225 |
| MCS48R | Right | 48 | 225 |
| MCS48L | Left | 48 | 225 |

Depth on all Standard Reader Stations is 12 7/8″. Width is 59 13/16″.
Reader Stations include 14 sorting shelves and one binder shelf.
*Standard Reader Stations feature a 34 7/16″ open area for computer monitors or supplies.

## Oversize Reader Station

MCO36R

| MODEL # | OPENING* | HGT | WGT |
|---|---|---|---|
| MCO36C | Centered | 36 | 229 |
| MCO36R | Right | 36 | 229 |
| MCO36L | Left | 36 | 229 |
| MCO42C | Centered | 42 | 250 |
| MCO42R | Right | 42 | 250 |
| MCO42L | Left | 42 | 250 |
| MCO48C | Centered | 48 | 275 |
| MCO48R | Right | 48 | 275 |
| MCO48L | Left | 48 | 275 |

Depth on all Oversize Reader Stations is 16 7/8″. Width is 69 13/16″.
Reader Stations include 14 sorting shelves and one binder shelf.
*Oversize Reader Stations feature a 40 7/16″ open area for computer monitors or supplies.

# *Sort Module Accessories*

## Plexiglass Overhead Display Boards

DSPBRD-S2

| MODEL # | DESCRIPTION | WGT |
|---|---|---|
| DSPBRD-S1 | 12″h Display Board for S1/L1 Module | 4 |
| DSPBRD-S2 | 12″h Display Board for S2/L2 Module | 8 |
| DSPBRD-S3 | 12″h Display Board for S3/L3 Module | 12 |
| DSPBRD-S4 | 12″h Display Board for S4/L4 Module | 16 |
| DSPBRD-S5 | 12″h Display Board for S5/L5 Module | 20 |
| DSPBRD-S6 | 12″h Display Board for S6/L6 Module | 24 |
| DSPBRD-01 | 12″h Display Board for O1/Z2 Module | 5 |

## Plexiglass Overhead Display Boards (con't.)

| MODEL # | DESCRIPTION | WGT |
|---|---|---|
| DSPBRD-02 | 12″h Display Board for O2/Z4 Module | 10 |
| DSPBRD-03 | 12″h Display Board for O3/Z6 Module | 15 |
| DSPBRD-04 | 12″h Display Board for O4/Z8 Module | 20 |
| DSPBRD-05 | 12″h Display Board for O5/Z10 Module | 25 |
| DSPBRD-06 | 12″h Display Board for O6/Z12 Module | 30 |

## Plexiglass Module Doors (3/16 Depth)

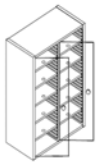

PLXS-30

Specify if for front or back of module

| MODEL # | DESCRIPTION | FRONT WIDTH | BACK WIDTH | BACK HEIGHT | WGT |
|---|---|---|---|---|---|
| 18″ High Door with 17 1/16″ Front Height | | | | | |
| PLXS-18 | Standard/Legal | 11 1/4 | 10 11/16 | 14 7/16 | 5 |
| PLXS-18-L | Std/Legal w/Lock | 11 1/4 | 10 11/16 | 14 7/16 | 5 |
| PLXO-18 | Oversize | 13 1/4 | 12 11/16 | 14 7/16 | 5 |
| PLXO-18-L | Oversize w/Lock | 13 1/4 | 12 11/16 | 14 7/16 | 5 |
| 24″ High Door with 23 1/16″ Front Height | | | | | |
| PLXS-24 | Standard/Legal | 11 1/4 | 10 11/16 | 20 7/16 | 6 |
| PLXS-24-L | Std/Legal w/Lock | 11 1/4 | 10 11/16 | 20 7/16 | 6 |
| PLXO-24 | Oversize | 13 1/4 | 12 11/16 | 20 7/16 | 6 |
| PLXO-24-L | Oversize w/Lock | 13 1/4 | 12 11/16 | 20 7/16 | 6 |
| 30″ High Door with 29 1/16″ Front Height | | | | | |
| PLXS-30 | Standard/Legal | 11 1/4 | 10 11/16 | 26 7/16 | 7 |
| PLXS-30-L | Std/Legal w/Lock | 11 1/4 | 10 11/16 | 26 7/16 | 7 |
| PLXO-30 | Oversize | 13 1/4 | 12 11/16 | 26 7/16 | 7 |
| PLXO-30-L | Oversize w/Lock | 13 1/4 | 12 11/16 | 26 7/16 | 7 |
| 36″ High Door with 35 1/16″ Front Height | | | | | |
| PLXS-36 | Standard/Legal | 11 1/4 | 10 11/16 | 32 7/16 | 8 |
| PLXS-36-L | Std/Legal w/Lock | 11 1/4 | 10 11/16 | 32 7/16 | 8 |
| PLXO-36 | Oversize | 13 1/4 | 12 11/16 | 32 7/16 | 8 |
| PLXO-36-L | Oversize w/Lock | 13 1/4 | 12 11/16 | 32 7/16 | 8 |
| 42″ High Door with 41 1/16″ Front Height | | | | | |
| PLXS-42 | Standard/Legal | 11 1/4 | 10 11/16 | 38 7/16 | 9 |
| PLXS-42-L | Std/Legal w/Lock | 11 1/4 | 10 11/16 | 38 7/16 | 9 |
| PLXO-42 | Oversize | 13 1/4 | 12 11/16 | 38 7/16 | 9 |
| PLXO-42-L | Oversize w/Lock | 13 1/4 | 12 11/16 | 38 7/16 | 9 |
| 48″ High Door with 47 1/16″ Front Height | | | | | |
| PLXS-48 | Std/Legal | 11 1/4 | 10 11/16 | 44 7/16 | 10 |
| PLXS-48-L | Std/Legal w/Lock | 11 1/4 | 10 11/16 | 44 7/16 | 10 |
| PLXO-48 | Oversize | 13 1/4 | 12 11/16 | 44 7/16 | 10 |
| PLXO-48-L | Oversize w/Lock | 13 1/4 | 12 11/16 | 44 7/16 | 10 |

# Guidelines for Specifying Corner Consoles & Modules

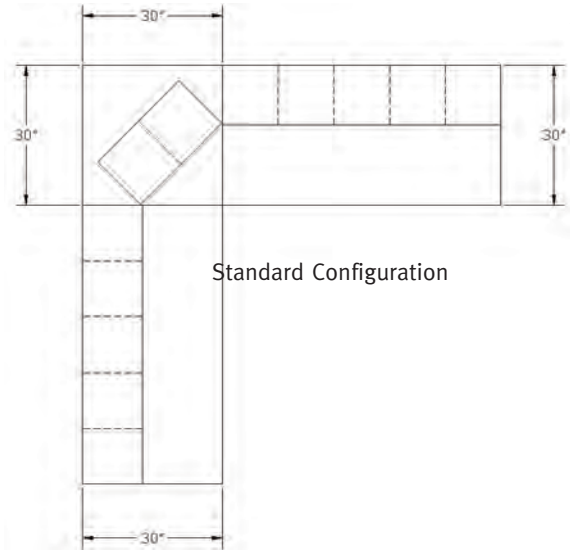


Standard Configuration

To get modules and consoles in the corners of 'L' or 'U' shaped configurations to line up, use the following guidelines:

**Standard-Size Modules**

a. Use a 30" deep console on each side of the corner unit
b. Use a 30" wide x 30" deep CT console for the corner unit
c. Use a two-section, standard-size module for the corner unit

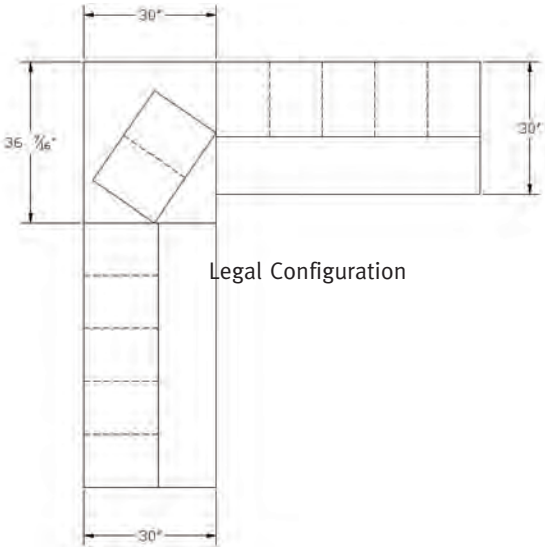


Legal Configuration

**Legal-Size Modules**

a. Use a 30" deep console on each side of the corner unit
b. Use a 36" wide x 30" deep CT console for the corner unit
c. Use a two-section, legal-size module for the corner unit

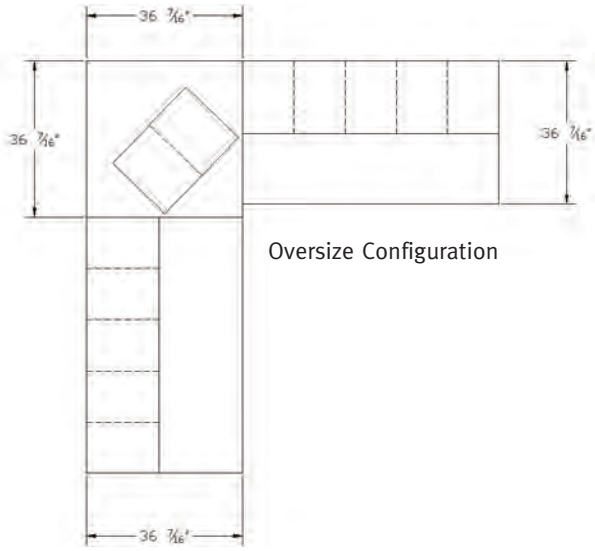


Oversize Configuration

**Oversize Modules**

a. Use a 36" deep console on each side of the corner unit
b. Use a 36" wide x 36" deep console for the corner unit
c. Use a two-section, oversize module for the corner unit

# Freestanding Sort Modules

## How to Specify Your Options

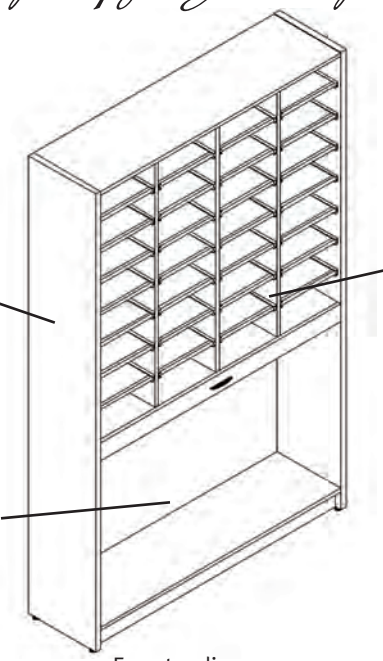

**FSM481276SBSR**

Shelf/Shelf Support Color

Module Laminate

Bottom Storage Area and Kickplate

**Sliding Doors**

| Model # | Description |
|---|---|
| D | With doors |
| x | No doors |

**Handle Options†**

| Model | Description |
|---|---|
| EL | Elliptical Black |
| ES | Elliptical Silver |
| CB | Crescent Black |
| CS | Crescent Silver |
| TC | Textured Crescent |
| FC | Flared Crescent |
| WP | Wired Pull (MR zinc) |
| SP | Special Handle |

†Recessed and bar not available on all units.

Doors

**Slot Type**
S = Standard Size
L = Legal Size
O = Oversize

Freestanding Sort Module

Sorting Depth

Handle

**F S M 4 2 1 6 7 2 L B D Y C S**

Sorting Width

Sorting Height

Bottom Storage Area
F = Full Length Sorting
B = Bottom Storage
R = Sliding Referernce
K = Kickplate

Locks

**Locks (per door)**

| Model # | Description |
|---|---|
| x | No locks |
| Y | Locks |

See page 60 for color codes.

## Notes

1. Full-height Freestanding Sort Modules include 12 shelves per column, providing 13 openings per column. The sorting inches are equal to (height - 6″) x # of columns.

2. Modules with Bottom Storage Area include 7 shelves per column, providing 8 openings per column. The sorting inches are equal to (height - 23″) x # of columns. Modules with 12″ Kickplate include 12 shelves per column, providing 13 openings per column. The sorting inches are equal to (height - 15″) x # of columns.

3. Freestanding module with sliding reference shelves include 7 shelves per column, providing 8 openings per column. The sorting inches are equal to (height - 32″) x # of columns.

4. Additional shelves can be ordered if more openings are required. Shelves can also be deleted if fewer openings are required.

5. Bottom storage areas will accommodate mail tubs.

6. Inside clearances on Bottom Storage Areas

| Size | Depth | Height |
|---|---|---|
| Standard | 12″ | 15″ |
| Legal/Oversize | 16″ | 15″ |

7. Sliding doors can be added to bottom storage areas, which reduces the depth clearance by 2½″.

8. Freestanding Sort Modules with Sliding Reference Shelves feature a bottom storage area and slide-out shelf located 30″ off the ground.

| Size | Shelf Pull Out Depth |
|---|---|
| Standard | 9¾″ |
| Legal/Oversize | 13¾″ |

9. Reductions in the height of Freestanding Sort Modules can be made with an upcharge.

10. All Freestanding Sort Modules are shipped fully assembled. When getting freight quotes, specify Class 100. If dimensions are required, add 3″ to each dimension for packing materials.

# Freestanding Sort Modules

## Without Doors

FSM361266S

| MODEL # | SEC | W | D | HGT | SLOTS | WGT |
|---|---|---|---|---|---|---|
| FSM361248S | 3 | 36 7/16 | 12 7/8 | 48 | 39 | 186 |
| FSM361260S | 3 | 36 7/16 | 12 7/8 | 60 | 39 | 207 |
| FSM361266S | 3 | 36 7/16 | 12 7/8 | 66 | 39 | 217 |
| FSM361272S | 3 | 36 7/16 | 12 7/8 | 72 | 39 | 228 |
| FSM361276S | 3 | 36 7/16 | 12 7/8 | 76 | 39 | 234 |
| FSM481248S | 4 | 48 1/8 | 12 7/8 | 48 | 52 | 226 |
| FSM481260S | 4 | 48 1/8 | 12 7/8 | 60 | 52 | 252 |
| FSM481266S | 4 | 48 1/8 | 12 7/8 | 66 | 52 | 265 |
| FSM481272S | 4 | 48 1/8 | 12 7/8 | 72 | 52 | 273 |
| FSM481276S | 4 | 48 1/8 | 12 7/8 | 76 | 52 | 281 |
| FSM361648L | 3 | 36 7/16 | 16 7/8 | 48 | 39 | 213 |
| FSM361660L | 3 | 36 7/16 | 16 7/8 | 60 | 39 | 239 |
| FSM361666L | 3 | 36 7/16 | 16 7/8 | 66 | 39 | 252 |
| FSM361672L | 3 | 36 7/16 | 16 7/8 | 72 | 39 | 264 |
| FSM361676L | 3 | 36 7/16 | 16 7/8 | 76 | 39 | 282 |
| FSM481648L | 4 | 48 1/8 | 16 7/8 | 48 | 52 | 253 |
| FSM481660L | 4 | 48 1/8 | 16 7/8 | 60 | 52 | 286 |
| FSM481666L | 4 | 48 1/8 | 16 7/8 | 66 | 52 | 301 |
| FSM481672L | 4 | 48 1/8 | 16 7/8 | 72 | 52 | 317 |
| FSM481676L | 4 | 48 1/8 | 16 7/8 | 76 | 52 | 327 |
| FSM421648O | 3 | 42 7/16 | 16 7/8 | 48 | 39 | 238 |
| FSM421660O | 3 | 42 7/16 | 16 7/8 | 60 | 39 | 266 |
| FSM421666O | 3 | 42 7/16 | 16 7/8 | 66 | 39 | 279 |
| FSM421672O | 3 | 42 7/16 | 16 7/8 | 72 | 39 | 294 |
| FSM421676O | 3 | 42 7/16 | 16 7/8 | 76 | 39 | 304 |
| FSM561648O | 4 | 56 1/8 | 16 7/8 | 48 | 52 | 277 |
| FSM561660O | 4 | 56 1/8 | 16 7/8 | 60 | 52 | 317 |
| FSM561666O | 4 | 56 1/8 | 16 7/8 | 66 | 52 | 334 |
| FSM561672O | 4 | 56 1/8 | 16 7/8 | 72 | 52 | 352 |
| FSM561676O | 4 | 56 1/8 | 16 7/8 | 76 | 52 | 363 |

## With Doors

FSM481272SD

| MODEL # | SEC | W | D | HGT | SLOTS | WGT |
|---|---|---|---|---|---|---|
| FSM361248SD | 3 | 36 7/16 | 14 3/4 | 48 | 39 | 217 |
| FSM361260SD | 3 | 36 7/16 | 14 3/4 | 60 | 39 | 244 |
| FSM361266SD | 3 | 36 7/16 | 14 3/4 | 66 | 39 | 259 |
| FSM361272SD | 3 | 36 7/16 | 14 3/4 | 72 | 39 | 274 |
| FSM361276SD | 3 | 36 7/16 | 14 3/4 | 76 | 39 | 282 |
| FSM481248SD | 4 | 48 1/8 | 14 3/4 | 48 | 52 | 265 |
| FSM481260SD | 4 | 48 1/8 | 14 3/4 | 60 | 52 | 303 |
| FSM481266SD | 4 | 48 1/8 | 14 3/4 | 66 | 52 | 321 |
| FSM481272SD | 4 | 48 1/8 | 14 3/4 | 72 | 52 | 333 |
| FSM481276SD | 4 | 48 1/8 | 14 3/4 | 76 | 52 | 345 |
| FSM361648LD | 3 | 36 7/16 | 18 3/4 | 48 | 39 | 243 |
| FSM361660LD | 3 | 36 7/16 | 18 3/4 | 60 | 39 | 277 |
| FSM361666LD | 3 | 36 7/16 | 18 3/4 | 66 | 39 | 293 |
| FSM361672LD | 3 | 36 7/16 | 18 3/4 | 72 | 39 | 318 |

## With Doors* (con't.)

| MODEL # | SEC | W | D | HGT | SLOTS | WGT |
|---|---|---|---|---|---|---|
| FSM361676LD | 3 | 36 7/16 | 18 3/4 | 76 | 39 | 330 |
| FSM481648LD | 4 | 48 1/8 | 18 3/4 | 48 | 52 | 294 |
| FSM481660LD | 4 | 48 1/8 | 18 3/4 | 60 | 52 | 337 |
| FSM481666LD | 4 | 48 1/8 | 18 3/4 | 66 | 52 | 358 |
| FSM481672LD | 4 | 48 1/8 | 18 3/4 | 72 | 52 | 377 |
| FSM481676LD | 4 | 48 1/8 | 18 3/4 | 76 | 52 | 391 |
| FSM421648OD | 3 | 42 7/16 | 18 3/4 | 48 | 39 | 274 |
| FSM421660OD | 3 | 42 7/16 | 18 3/4 | 60 | 39 | 310 |
| FSM421666OD | 3 | 42 7/16 | 18 3/4 | 66 | 39 | 329 |
| FSM421672OD | 3 | 42 7/16 | 18 3/4 | 72 | 39 | 348 |
| FSM421676OD | 3 | 42 7/16 | 18 3/4 | 76 | 39 | 360 |
| FSM561648OD | 4 | 56 1/8 | 18 3/4 | 48 | 52 | 329 |
| FSM561660OD | 4 | 56 1/8 | 18 3/4 | 60 | 52 | 375 |
| FSM561666OD | 4 | 56 1/8 | 18 3/4 | 66 | 52 | 398 |
| FSM561672OD | 4 | 56 1/8 | 18 3/4 | 72 | 52 | 421 |
| FSM561676OD | 4 | 56 1/8 | 18 3/4 | 76 | 52 | 437 |

## With Bottom Storage without Sliding Shelf

FSM361266SB

| MODEL # | SEC | W | D | HGT | SLOTS | WGT |
|---|---|---|---|---|---|---|
| FSM361248SB | 3 | 36 7/16 | 12 7/8 | 48 | 24 | 189 |
| FSM361260SB | 3 | 36 7/16 | 12 7/8 | 60 | 24 | 209 |
| FSM361266SB | 3 | 36 7/16 | 12 7/8 | 66 | 24 | 220 |
| FSM361272SB | 3 | 36 7/16 | 12 7/8 | 72 | 24 | 230 |
| FSM361276SB | 3 | 36 7/16 | 12 7/8 | 76 | 24 | 238 |
| FSM481248SB | 4 | 48 1/8 | 12 7/8 | 48 | 32 | 227 |
| FSM481260SB | 4 | 48 1/8 | 12 7/8 | 60 | 32 | 253 |
| FSM481266SB | 4 | 48 1/8 | 12 7/8 | 66 | 32 | 266 |
| FSM481272SB | 4 | 48 1/8 | 12 7/8 | 72 | 32 | 276 |
| FSM481276SB | 4 | 48 1/8 | 12 7/8 | 76 | 32 | 285 |
| FSM361648LB | 3 | 36 7/16 | 16 7/8 | 48 | 24 | 213 |
| FSM361660LB | 3 | 36 7/16 | 16 7/8 | 60 | 24 | 239 |
| FSM361666LB | 3 | 36 7/16 | 16 7/8 | 66 | 24 | 251 |
| FSM361672LB | 3 | 36 7/16 | 16 7/8 | 72 | 24 | 264 |
| FSM361676LB | 3 | 36 7/16 | 16 7/8 | 76 | 24 | 278 |
| FSM481648LB | 4 | 48 1/8 | 16 7/8 | 48 | 32 | 254 |
| FSM481660LB | 4 | 48 1/8 | 16 7/8 | 60 | 32 | 286 |
| FSM481666LB | 4 | 48 1/8 | 16 7/8 | 66 | 32 | 301 |
| FSM481672LB | 4 | 48 1/8 | 16 7/8 | 72 | 32 | 317 |
| FSM481676LB | 4 | 48 1/8 | 16 7/8 | 76 | 32 | 328 |
| FSM421648OB | 3 | 42 7/16 | 16 7/8 | 48 | 24 | 239 |
| FSM421660OB | 3 | 42 7/16 | 16 7/8 | 60 | 24 | 266 |
| FSM421666OB | 3 | 42 7/16 | 16 7/8 | 66 | 24 | 281 |
| FSM421672OB | 3 | 42 7/16 | 16 7/8 | 72 | 24 | 294 |
| FSM421676OB | 3 | 42 7/16 | 16 7/8 | 76 | 24 | 304 |
| FSM561648OB | 4 | 56 1/8 | 16 7/8 | 48 | 32 | 285 |
| FSM561660OB | 4 | 56 1/8 | 16 7/8 | 60 | 32 | 318 |
| FSM561666OB | 4 | 56 1/8 | 16 7/8 | 66 | 32 | 337 |
| FSM561672OB | 4 | 56 1/8 | 16 7/8 | 72 | 32 | 353 |
| FSM561676OB | 4 | 56 1/8 | 16 7/8 | 76 | 32 | 364 |

## With Bottom Storage with Sliding Shelf*

FSM481276SBSR

| MODEL # | SEC | W | D | HGT | SLOTS | WGT |
|---|---|---|---|---|---|---|
| FSM361248SBSR | 3 | 36 7/16 | 12 7/8 | 48 | 24 | 239 |
| FSM361260SBSR | 3 | 36 7/16 | 12 7/8 | 60 | 24 | 259 |
| FSM361266SBSR | 3 | 36 7/16 | 12 7/8 | 66 | 24 | 270 |
| FSM361272SBSR | 3 | 36 7/16 | 12 7/8 | 72 | 24 | 280 |
| FSM361276SBSR | 3 | 36 7/16 | 12 7/8 | 76 | 24 | 288 |
| FSM481248SBSR | 4 | 48 1/8 | 12 7/8 | 48 | 32 | 277 |
| FSM481260SBSR | 4 | 48 1/8 | 12 7/8 | 60 | 32 | 303 |
| FSM481266SBSR | 4 | 48 1/8 | 12 7/8 | 66 | 32 | 316 |
| FSM481272SBSR | 4 | 48 1/8 | 12 7/8 | 72 | 32 | 326 |
| FSM481276SBSR | 4 | 48 1/8 | 12 7/8 | 76 | 32 | 335 |
| FSM361648LBSR | 3 | 36 7/16 | 16 7/8 | 48 | 24 | 263 |
| FSM361660LBSR | 3 | 36 7/16 | 16 7/8 | 60 | 24 | 289 |
| FSM361666LBSR | 3 | 36 7/16 | 16 7/8 | 66 | 24 | 301 |
| FSM361672LBSR | 3 | 36 7/16 | 16 7/8 | 72 | 24 | 314 |
| FSM361676LBSR | 3 | 36 7/16 | 16 7/8 | 76 | 24 | 328 |
| FSM481648LBSR | 4 | 48 1/8 | 16 7/8 | 48 | 32 | 304 |
| FSM481660LBSR | 4 | 48 1/8 | 16 7/8 | 60 | 32 | 336 |
| FSM481666LBSR | 4 | 48 1/8 | 16 7/8 | 66 | 32 | 351 |
| FSM481672LBSR | 4 | 48 1/8 | 16 7/8 | 72 | 32 | 367 |
| FSM481676LBSR | 4 | 48 1/8 | 16 7/8 | 76 | 32 | 378 |
| FSM421648OBSR | 3 | 42 7/16 | 16 7/8 | 48 | 24 | 289 |
| FSM421660OBSR | 3 | 42 7/16 | 16 7/8 | 60 | 24 | 316 |
| FSM421666OBSR | 3 | 42 7/16 | 16 7/8 | 66 | 24 | 331 |
| FSM421672OBSR | 3 | 42 7/16 | 16 7/8 | 72 | 24 | 344 |
| FSM421676OBSR | 3 | 42 7/16 | 16 7/8 | 76 | 24 | 354 |
| FSM561648OBSR | 4 | 56 1/8 | 16 7/8 | 48 | 32 | 335 |
| FSM561660OBSR | 4 | 56 1/8 | 16 7/8 | 60 | 32 | 368 |
| FSM561666OBSR | 4 | 56 1/8 | 16 7/8 | 66 | 32 | 387 |
| FSM561672OBSR | 4 | 56 1/8 | 16 7/8 | 72 | 32 | 403 |
| FSM561676OBSR | 4 | 56 1/8 | 16 7/8 | 76 | 32 | 414 |

*Includes a sliding reference shelf above the bottom storage area.

## With 12” Kickplate

FSM481672LK

| MODEL # | SEC | W | D | HGT | SLOTS | WGT |
|---|---|---|---|---|---|---|
| FSM361248SK | 3 | 36 7/16 | 12 7/8 | 48 | 39 | 186 |
| FSM361260SK | 3 | 36 7/16 | 12 7/8 | 60 | 39 | 207 |
| FSM361266SK | 3 | 36 7/16 | 12 7/8 | 66 | 39 | 217 |
| FSM361272SK | 3 | 36 7/16 | 12 7/8 | 72 | 39 | 228 |
| FSM361276SK | 3 | 36 7/16 | 12 7/8 | 76 | 39 | 234 |
| FSM481248SK | 4 | 48 1/8 | 12 7/8 | 48 | 52 | 226 |
| FSM481260SK | 4 | 48 1/8 | 12 7/8 | 60 | 52 | 252 |
| FSM481266SK | 4 | 48 1/8 | 12 7/8 | 66 | 52 | 265 |
| FSM481272SK | 4 | 48 1/8 | 12 7/8 | 72 | 52 | 273 |
| FSM481276SK | 4 | 48 1/8 | 12 7/8 | 76 | 52 | 281 |
| FSM361648LK | 3 | 36 7/16 | 16 7/8 | 48 | 39 | 213 |
| FSM361660LK | 3 | 36 7/16 | 16 7/8 | 60 | 39 | 239 |
| FSM361666LK | 3 | 36 7/16 | 16 7/8 | 66 | 39 | 252 |
| FSM361672LK | 3 | 36 7/16 | 16 7/8 | 72 | 39 | 264 |
| FSM361676LK | 3 | 36 7/16 | 16 7/8 | 76 | 39 | 282 |
| FSM481648LK | 4 | 48 1/8 | 16 7/8 | 48 | 52 | 253 |
| FSM481660LK | 4 | 48 1/8 | 16 7/8 | 60 | 52 | 286 |
| FSM481666LK | 4 | 48 1/8 | 16 7/8 | 66 | 52 | 301 |
| FSM481672LK | 4 | 48 1/8 | 16 7/8 | 72 | 52 | 317 |
| FSM481676LK | 4 | 48 1/8 | 16 7/8 | 76 | 52 | 327 |
| FSM421648OK | 3 | 42 7/16 | 16 7/8 | 48 | 39 | 238 |
| FSM421660OK | 3 | 42 7/16 | 16 7/8 | 60 | 39 | 266 |
| FSM421666OK | 3 | 42 7/16 | 16 7/8 | 66 | 39 | 279 |
| FSM421672OK | 3 | 42 7/16 | 16 7/8 | 72 | 39 | 294 |
| FSM421676OK | 3 | 42 7/16 | 16 7/8 | 76 | 39 | 304 |
| FSM561648OK | 4 | 56 1/8 | 16 7/8 | 48 | 52 | 277 |
| FSM561660OK | 4 | 56 1/8 | 16 7/8 | 60 | 52 | 317 |
| FSM561666OK | 4 | 56 1/8 | 16 7/8 | 66 | 52 | 334 |
| FSM561672OK | 4 | 56 1/8 | 16 7/8 | 72 | 52 | 352 |
| FSM561676OK | 4 | 56 1/8 | 16 7/8 | 76 | 52 | 363 |

## All Wood Module Drawers

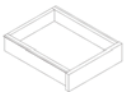

| MODEL # | WIDTH | DEPTH | HEIGHT | WEIGHT |
|---|---|---|---|---|
| MDSTD (Standard) | 10 3/4 | 11 3/4 | 3 1/2 | 5 |
| MDLGL (Legal) | 10 3/4 | 15 3/4 | 3 1/2 | 7 |
| MDOVR (Oversize) | 12 3/4 | 15 3/4 | 3 1/2 | 8 |

MDOVR

## Accessories for Standard Module Shelves

| MODEL # | DESCRIPTION | W | D | HGT | WGT |
|---|---|---|---|---|---|
| RMS10 | Single shelf | 10 3/4 | 11 3/4 | | 1 |
| RMS10-5 | Set of 5 shelves | 10 3/4 | 11 3/4 | | 3 |
| WRMS10 | Laminated wood shelf | 10 3/4 | 11 3/4 | 5/8 | 2 |
| xRMS10 | Shelf deduct < standard amt | | | | n/a |
| INDx-S | 10 Sheets of indexing | | | | 1 |
| RMS10-V5 | Set of 5 shelves w/vert. backs | | | | 4 |
| RMS10HVD01 | Shelf w/2 1/2"h half-size adapter | | | | |
| RMS10HVD03 | Shelf w/4"h half-size adapter | | | | |
| CVR-SF | Plastic index cover for front of shelf | 10 3/4 | | | 1 |
| CVR-SB | Plastic index cover for back of shelf | 10 | | | 1 |
| STBCK-S | Stick-on indexing extrusion | 10 3/4 | | | 1 |

## Accessories for Legal Module Shelves

| MODEL # | DESCRIPTION | W | D | HGT | WGT |
|---|---|---|---|---|---|
| RMS14 | Single shelf | 10 3/4 | 15 3/4 | | 1 |
| RMS14-5 | Set of 5 shelves | 10 3/4 | 15 3/4 | | 3 |
| WRMS14 | Laminated wood shelf | 10 3/4 | 15 3/4 | 5/8 | 2 |
| xRMS14 | Shelf deduct < standard amt | | | | n/a |
| INDx-S | 10 Sheets of indexing | | | | 1 |
| RMS14-V5 | Set of 5 shelves w/vert. backs | | | | 4 |
| RMS14HVD01 | Shelf w/2 1/2"h half-size adapter | | | | |
| RMS14HVD03 | Shelf w/4"h half-size adapter | | | | |
| CVR-SF | Plastic index cover for front of shelf | 10 3/4 | | | 1 |
| CVR-SB | Plastic index cover for back of shelf | 10 | | | 1 |
| STBCK-S | Stick-on indexing extrusion | 10 3/4 | | | 1 |

## Accessories for Oversize Module Shelves

| MODEL # | DESCRIPTION | W | D | HGT | WGT |
|---|---|---|---|---|---|
| RMS12 | Single shelf | 12 3/4 | 15 3/4 | | 1 |
| RMS12-5 | Set of 5 shelves | 12 3/4 | 15 3/4 | | 3 |
| WRMS12 | Laminated wood shelf | 12 3/4 | 15 3/4 | 5/8 | 2 |
| xRMS12 | Shelf deduct < standard amt | | | | n/a |
| INDx-O | 10 sheets of indexing | | | | 1 |
| RMS12-V5 | Set of 5 shelves w/vert. backs | | | | 4 |

## Accessories for Oversize Module Shelves (cont.)

| MODEL # | DESCRIPTION | W | D | HGT | WGT |
|---|---|---|---|---|---|
| RMS12HVD01 | Shelf w/2 1/2"h half-size adapter | | | | |
| RMS12HVD03 | Shelf w/4"h half-size adapter | | | | |
| CVR-OF | Plastic index cover for front of shelf | 12 3/4 | | | 1 |
| CVR-OB | Plastic index cover for back of shelf | 12 | | | 1 |
| STBCK-O | Stick-on indexing extrusion | 12 3/4 | | | 1 |

## Accessories for Zip Size Module Shelves

| MODEL # | DESCRIPTION | W | D | HGT | WGT |
|---|---|---|---|---|---|
| RMSz | Single shelf | 6 1/16 | 11 3/4 | | 1 |
| RMSz-5 | Set of 5 shelves | 6 1/16 | 11 3/4 | | 3 |
| xRMSz | Shelf deduct < standard amt | | | | |

## Accessories

| MODEL # | DESCRIPTION |
|---|---|
| MRUSTL-24 | 18" Black undersurface task light |
| MRUSTLARM | Swivel-arm task light |
| MRTBwwhh | Tackboad (per square foot) |

MRUSTL-24

# Accessories Notes

1. Shelf supports and shelves are available in four colors: clear, black, brown, and grey. Laminated wood shelves should be ordered in laminates with matching edge banding.

2. Shelves have full-width index channels on both the front and rear. The channel is encased with a clear plastic index cover.

3. Color-coded index strips are included with each module, one sheet (18 index strips) per column. If you want a specific colo , you must request that color. If no specific color  equest is made, you will receive assorted colors.

4. Index strips are available in the following colors:

| | |
|---|---|
| Green | Light Green |
| Magenta | Electric Yellow |
| Canary | Blue |
| Orange | White |
| Gold | Electric Pink |

5. Indexing templates are available, at no charge, via our web site at www.hamiltoncs.com under the Resources section. Contact Customer Service for more information.

6. These special shelves are also available:
   Laminated wood shelves for additional weight capacity
   Shelves with 3″ vertical back for open-back modules
   Shelves with half-size adapters for doubled sort openings.

7. Plexiglass doors are available in clear and smoked acrylic. If you are ordering an open-back sort module, specify whether the doors are going on the front or back of the unit. All doors are hinged on the left side and feature key or butterfly locks

8. When plexiglass doors are placed on the front of a closed-back sort module, they restrict placement of shelves on the three upper, two middle, and three lower shelf supports. Doors must be removed to reposition shelves in these supports.

9. Specify location of all clear-acrylic display boards. Do not specify display boards for corner sort modules in L- or U-shaped configurations when display boa ds are specified fo adjacent modules.

10.Tasklights and tackboards can be installed in the riser area of sort modules. Please specify fabric for tackboards.

# Bulk Sort Units

## With Flat Shelves*

SB551924

| MODEL # | WIDTH | DEPTH | HEIGHT | WEIGHT |
|---|---|---|---|---|
| One Shelf | | | | |
| SB551924 | 56 1/8 | 19 | 24 | 110 |
| SB691924 | 69 13/16 | 19 | 24 | 130 |
| Two Shelves | | | | |
| SB551936 | 56 1/8 | 19 | 36 | 160 |
| SB691936 | 69 13/16 | 19 | 36 | 190 |
| Three Shelves | | | | |
| SB551948 | 56 1/8 | 19 | 48 | 230 |
| SB691948 | 69 13/16 | 19 | 48 | 270 |

## With Angled Shelves*

AB482061

| MODEL # | WIDTH | DEPTH | HEIGHT | WEIGHT |
|---|---|---|---|---|
| One Shelf | | | | |
| AB482021 | 48 1/8 | 20 | 21 | 102 |
| AB602021 | 59 13/16 | 20 | 21 | 122 |
| Two Shelves | | | | |
| AB482042 | 48 1/8 | 20 | 42 | 177 |
| AB602042 | 59 13/16 | 20 | 42 | 209 |
| Three Shelves | | | | |
| AB482061 | 48 1/8 | 20 | 61 | 248 |
| AB602061 | 59 13/16 | 20 | 61 | 272 |
| Four Shelves | | | | |
| AB482081 | 48 1/8 | 20 | 81 | 320 |
| AB602081 | 59 13/16 | 20 | 81 | 377 |

*1. All Desktop Bulk Sort Units have an aluminum-extrusion front edge.

2. Units with flat shelves have an inside clearance of 10 13/16.

3. Units with angled shelves have a 1″x1″ aluminum stop on shelf front.

4. Shelves are angled at 25 degrees, will hold three or four mail tubs or AB35-200 bins per shelf (depending on model width), and have an inside clearance of 16 3/4 between angled shelves and a top shelf inside clearance of 12 1/4.

5. Bins must be ordered separately.

6. All Bulk Sort Units are shipped fully assembled.

7. For freight quotes, specify Class 100 and if dimensions are required, add 3″ to each dimension for packing materials.

8. Color choice for Bulk Sort laminate and edge banding should be specified individually.

## Bulk Sort Bins

SB1219

| MODEL # | WIDTH | DEPTH | HEIGHT | WEIGHT |
|---|---|---|---|---|
| Bins for Bulk Sort Units with Flat Shelves | | | | |
| SB1219 | 12 3/4 | 19 | 6 | 3 |
| Bins for Bulk Sort Units with Angled Shelves* | | | | |
| AB35-200 | 13 1/2 | 19 1/2 | 8 | 6 |
| AB35-201 | Lids for AB35-200 | | | |
| AB35-010 | Label holder for AB35-200 | | | |
| All Purpose Bins | | | | |
| AB34-240 | 19 | 24 1/2 | 9 1/2 | 6 |
| AB13-107 | 18 7/8 | 15 1/4 | 12 7/16 | 5 |

1. SB1219 bins are constructed of molded plastic and have a full width index channel.

2. Index strips are included.

3. SB1219 bins will fit inside oversize sort modules, but must rest on shelf.

4. Angled shelf bulks sort bins are available in red, blue and grey.

5. To specify red or blue bins, add ‘R’ or ‘B’ to the end of the of the model number.

6. If no color is specified, bins will be grey.

7. Angled self bins nest together to take up minimal space when not in use.

8. AB34-240 bins are multi-purpose with rounded corners and rolled-top rims to form comfortable handles for easy carrying.

9. AB34-240 and AB13-017 bins are available in grey only.

10. AB13-017 bins stack to form tall storage arrangements.

11. Dimensions for other popular mail bins:
US Postal Tub 13 1/2″w x 18″d x 13 1/2″h
Us Postal Tray 13 1/2″w x 25″d x 5″h

# Masterseries **Consoles**

## *How to Specify Your Options*

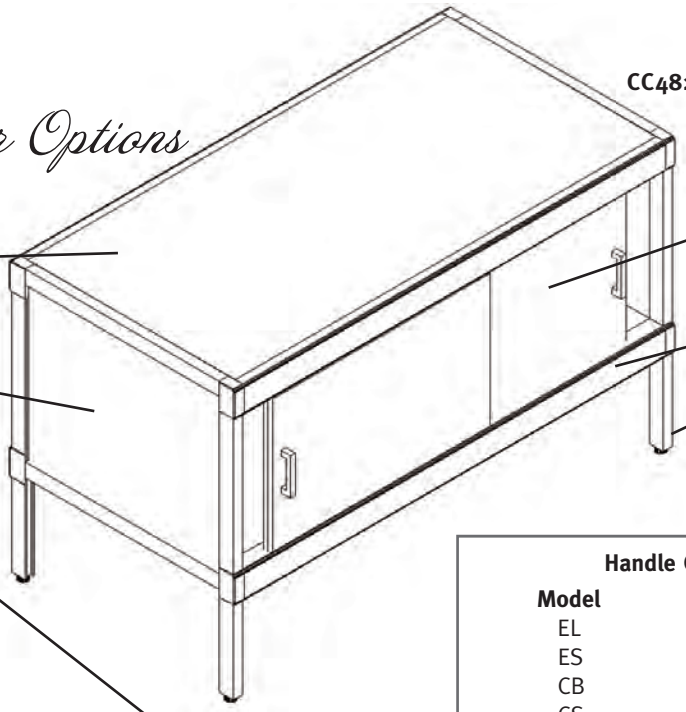


| Model | Description |
|---|---|
| V+ Count | Yes |
| x | No |

*Count would indicate number of partitions required

**Handle Options†**

| Model | Description |
|---|---|
| EL | Elliptical Black |
| ES | Elliptical Silver |
| CB | Crescent Black |
| CS | Crescent Silver |
| TC | Textured Crescent |
| FC | Flared Crescent |
| WP | Wired Pull (MR zinc) |
| SP | Special Handle |

†Recessed and bar not available on all units.

| Model | Description |
|---|---|
| L | Laminate |
| A | ABS |
| S | Stainless Steel |

**Console Type**
CT = Basic Console
CH = Console w/Half-Depth Shelf
CS = Console w/Full-Depth Shelf
CC = Cabinet Console
Cx = Centered Modesty

Depth

Top Finish

**Accepts Wheels**
W = Wheel
x =No Wheel (for 9" clearance console only)

**Wood Top Corner****
C = Wood Top
x = No Wood Top

Undertable Vertical Partitions

Handle Options

**C C 6 0 3 0 3 0 L B W x x 3 V 1 Y F C**

Width

Height

**Clearance Option**
B = 3″ Clearance
x = 9″ Clearance

**Dump Rim****
3 = Three Sided (F or B)
4 = Four Sided (F or B)
x = None

Locks

Adjustable Legs

| Model | Description |
|---|---|
| x | No Adjust |
| A | Adjustable Legs |

**Locks**

| Model | Description |
|---|---|
| x | No locks |
| Y | Locks |

See page 60 for color codes.
*Wood top corners do not have the dump rim option.

# Notes

1. All consoles feature modesty panels located at the rear. The half shelf on CH consoles is also located at the rear.

2. All consoles 36″ deep and 36″ or wider have support bars mounted front-to-rear under the workstation.

3. Wheels can be added to fixed-height consoles with 9″ floor clearance only. When adding wheels, add 'W' to the end of the model number to keep overall console height standard. Wheels must be ordered separately (see pg. 47).

4. Use Cx consoles where 48″ depth is required (see pg. 39).

5. Consoles 30″ or 36″ high with 9" clearances only can be fitted with adjustable legs. Order by adding 'A' to the end of the model number. Console height will adjust on 1/2″ increments between 28″-32″ on 30″ high consoles and 34″-38" on 36" high consoles.

6. Adjustable consoles have a 12" range, from 28″h to 40″h.

7. Crank handles and electrical switches are located on the right-hand side of the consoles.

8. All adjustable consoles feature a 3″ clearance.

9. Roller tables feature 22″w steel ball-bearing rollers mounted on 3″ centers and a styrene top.

10. All consoles are shipped knocked down. When getting freight quotes, specify Class 85. If dimensions are required, use 10″ for the height of the box and add 3″ to the width and depth of the console.

11. Modifications can be made to the width, depth, height of the console and the position of the modesty panel.

12.Inside dimensions

| MODEL WIDTH | INSIDE WIDTH | MODEL DEPTH | HALF-SHELF DEPTH | FULL-SHELF DEPTH | MODEL HEIGHT | CAB HEIGHT 9″ CLEAR | CAB HEIGHT 3″ CLEAR |
|---|---|---|---|---|---|---|---|
| 24 | 22 3/4 | 24 | 11 7/16 | 21 7/8 | 30 | 15 7/8 | 21 7/8 |
| 30 | 28 | 30 | 14 1/16 | 27 1/8 | 36 | 21 7/8 | 27 7/8 |
| 36 | 34 7/16 | 36 | 17 15/16 | 33 9/16 | 42 | 27 7/8 | 33 9/16 |
| 42 | 40 7/16 | | | | | | |
| 48 | 46 1/8 | | | | | | |
| 55 | 54 1/8 | | | | | | |
| 60 | 57 13/16 | | | | | | |
| 69 | 67 13/16 | | | | | | |
| 72 | 69 1/2 | | | | | | |
| 84 | 81 1/2 | | | | | | |

# *Console Products*

## 30" High with 9" Clearance

CT603030

| MODEL # | WIDTH | DEPTH | WEIGHT |
|---|---|---|---|
| CT242430 | 24 3/4 | 24 3/4 | 73 |
| CT243030 | 24 3/4 | 30 | 80 |
| CT243630 | 24 3/4 | 36 7/16 | 90 |
| CT302430 | 30 | 24 3/4 | 78 |
| CT303030 | 30 | 30 | 87 |
| CT303630 | 30 | 36 7/16 | 97 |
| CT362430 | 36 7/16 | 24 3/4 | 86 |
| CT363030 | 36 7/16 | 30 | 95 |
| CT363630 | 36 7/16 | 36 7/16 | 106 |
| CT422430 | 42 7/16 | 24 3/4 | 92 |
| CT423030 | 42 7/16 | 30 | 102 |
| CT423630 | 42 7/16 | 36 7/16 | 114 |
| CT482430 | 48 1/8 | 24 3/4 | 99 |
| CT483030 | 48 1/8 | 30 | 110 |
| CT483630 | 48 1/8 | 36 7/16 | 122 |
| CT552430 | 56 1/8 | 24 3/4 | 109 |
| CT553030 | 56 1/8 | 30 | 120 |
| CT553630 | 56 1/8 | 36 7/16 | 133 |
| CT602430 | 59 13/16 | 24 3/4 | 113 |
| CT603030 | 59 13/16 | 30 | 124 |
| CT603630 | 59 13/16 | 36 7/16 | 139 |
| CT692430 | 69 13/16 | 24 3/4 | 136 |
| CT693030 | 69 13/16 | 30 | 150 |
| CT693630 | 69 13/16 | 36 7/16 | 167 |
| CT722430 | 71 1/2 | 24 3/4 | 142 |
| CT723030 | 71 1/2 | 30 | 155 |
| CT723630 | 71 1/2 | 36 7/16 | 172 |
| CT842430 | 83 1/2 | 24 3/4 | 164 |
| CT843030 | 83 1/2 | 30 | 179 |
| CT843630 | 83 1/2 | 36 7/16 | 197 |

## 30" High with 3" Clearance

CT723630B

| MODEL # | WIDTH | DEPTH | WEIGHT |
|---|---|---|---|
| CT242430B | 24 3/4 | 24 3/4 | 78 |
| CT243030B | 24 3/4 | 30 | 86 |
| CT243630B | 24 3/4 | 36 7/16 | 96 |
| CT302430B | 30 | 24 3/4 | 84 |
| CT303030B | 30 | 30 | 92 |
| CT303630B | 30 | 36 7/16 | 102 |
| CT362430B | 36 7/16 | 24 3/4 | 91 |
| CT363030B | 36 7/16 | 30 | 100 |
| CT363630B | 36 7/16 | 36 7/16 | 111 |
| CT422430B | 42 7/16 | 24 3/4 | 98 |
| CT423030B | 42 7/16 | 30 | 108 |
| CT423630B | 42 7/16 | 36 7/16 | 120 |
| CT482430B | 48 1/8 | 24 3/4 | 105 |

## 30" High with 3" Clearance (con't.)

| MODEL # | WIDTH | DEPTH | WEIGHT |
|---|---|---|---|
| CT483030B | 48 1/8 | 30 | 116 |
| CT483630B | 48 1/8 | 36 7/16 | 128 |
| CT552430B | 56 1/8 | 24 3/4 | 114 |
| CT553030B | 56 1/8 | 30 | 125 |
| CT553630B | 56 1/8 | 36 7/16 | 139 |
| CT602430B | 59 13/16 | 24 3/4 | 119 |
| CT603030B | 59 13/16 | 30 | 130 |
| CT603630B | 59 13/16 | 36 7/16 | 144 |
| CT692430B | 69 13/16 | 24 3/4 | 143 |
| CT693030B | 69 13/16 | 30 | 156 |
| CT693630B | 69 13/16 | 36 7/16 | 173 |
| CT722430B | 71 1/2 | 24 3/4 | 147 |
| CT723030B | 71 1/2 | 30 | 161 |
| CT723630B | 71 1/2 | 36 7/16 | 178 |
| CT842430B | 83 1/2 | 24 3/4 | 169 |
| CT843030B | 83 1/2 | 30 | 185 |
| CT843630B | 83 1/2 | 36 7/16 | 204 |

## Options

| MODIFICATION | MODEL # CHANGE |
|---|---|
| Accepts wheels | CTwwdd 30W |
| Wood top corner | CTwwdd 30C |
| Adjustable legs | CTwwdd 30A |

## 36" High with 9" Clearance*

CT422436

| MODEL # | WIDTH | DEPTH | WEIGHT |
|---|---|---|---|
| CT242436 | 24 3/4 | 24 3/4 | 81 |
| CT243036 | 24 3/4 | 30 | 90 |
| CT243636 | 24 3/4 | 36 7/16 | 101 |
| CT302436 | 30 | 24 3/4 | 88 |
| CT303036 | 30 | 30 | 97 |
| CT303636 | 30 | 36 7/16 | 109 |
| CT362436 | 36 7/16 | 24 3/4 | 96 |
| CT363036 | 36 7/16 | 30 | 106 |
| CT363636 | 36 7/16 | 36 7/16 | 118 |
| CT422436 | 42 7/16 | 24 3/4 | 103 |
| CT423036 | 42 7/16 | 30 | 113 |
| CT423636 | 42 7/16 | 36 7/16 | 127 |
| CT482436 | 48 1/8 | 24 3/4 | 110 |
| CT483036 | 48 1/8 | 30 | 121 |
| CT483636 | 48 1/8 | 36 7/16 | 135 |
| CT552436 | 56 1/8 | 24 3/4 | 120 |
| CT553036 | 56 1/8 | 30 | 132 |
| CT553636 | 56 1/8 | 36 7/16 | 146 |
| CT602436 | 59 13/16 | 24 3/4 | 124 |
| CT603036 | 59 13/16 | 30 | 136 |
| CT603636 | 59 13/16 | 36 7/16 | 152 |
| CT692436 | 69 13/16 | 24 3/4 | 150 |

## 36" High with 9" Clearance* (con't.)

| MODEL # | WIDTH | DEPTH | WEIGHT |
|---|---|---|---|
| CT693036 | 69 13/16 | 30 | 165 |
| CT693636 | 69 13/16 | 36 7/16 | 183 |
| CT722436 | 71 1/2 | 24 3/4 | 155 |
| CT723036 | 71 1/2 | 30 | 169 |
| CT723636 | 71 1/2 | 36 7/16 | 188 |
| CT842436 | 83 1/2 | 24 3/4 | 178 |
| CT843036 | 83 1/2 | 30 | 195 |
| CT843636 | 83 1/2 | 36 7/16 | 215 |

## 36" High with 3" Clearance

CT243636B

| MODEL # | WIDTH | DEPTH | WEIGHT |
|---|---|---|---|
| CT242436B | 24 3/4 | 24 3/4 | 87 |
| CT243036B | 24 3/4 | 30 | 96 |
| CT243636B | 24 3/4 | 36 7/16 | 107 |
| CT302436B | 30 | 24 3/4 | 94 |
| CT303036B | 30 | 30 | 102 |
| CT303636B | 30 | 36 7/16 | 114 |
| CT362436B | 36 7/16 | 24 3/4 | 101 |
| CT363036B | 36 7/16 | 30 | 111 |
| CT363636B | 36 7/16 | 36 7/16 | 123 |
| CT422436B | 42 7/16 | 24 3/4 | 109 |
| CT423036B | 42 7/16 | 30 | 119 |
| CT423636B | 42 7/16 | 36 7/16 | 132 |
| CT482436B | 48 1/8 | 24 3/4 | 116 |
| CT483036B | 48 1/8 | 30 | 127 |
| CT483636B | 48 1/8 | 36 7/16 | 141 |
| CT552436B | 56 1/8 | 24 3/4 | 125 |
| CT553036B | 56 1/8 | 30 | 138 |
| CT553636B | 56 1/8 | 36 7/16 | 152 |
| CT602436B | 59 13/16 | 24 3/4 | 130 |
| CT603036B | 59 13/16 | 30 | 142 |
| CT603636B | 59 13/16 | 36 7/16 | 157 |
| CT692436B | 69 13/16 | 24 3/4 | 156 |
| CT693036B | 69 13/16 | 30 | 171 |
| CT693636B | 69 13/16 | 36 7/16 | 189 |
| CT722436B | 71 1/2 | 24 3/4 | 161 |
| CT723036B | 71 1/2 | 30 | 176 |
| CT723636B | 71 1/2 | 36 7/16 | 194 |
| CT842436B | 83 1/2 | 24 3/4 | 184 |
| CT843036B | 83 1/2 | 30 | 201 |
| CT843636B | 83 1/2 | 36 7/16 | 220 |

## Options

| MODIFICATION | MODEL # CHANGE | PRICE |
|---|---|---|
| Accepts wheels | CTwwdd 36W | None |
| Wood top corner | CTwwdd 30C | None |
| Adjustable legs | CTwwdd 36A | 38 |
| 42" height | CTwwdd 42 | 107 |

## 30" High Half-Shelf with 9" Clearance

CH603030

| MODEL # | WIDTH | DEPTH | WEIGHT |
|---|---|---|---|
| CH242430 | 24 3/4 | 24 3/4 | 79 |
| CH243030 | 24 3/4 | 30 | 88 |
| CH243630 | 24 3/4 | 36 7/16 | 99 |
| CH302430 | 30 | 24 3/4 | 86 |
| CH303030 | 30 | 30 | 96 |
| CH303630 | 30 | 36 7/16 | 108 |
| CH362430 | 36 7/16 | 24 3/4 | 96 |
| CH363030 | 36 7/16 | 30 | 107 |
| CH363630 | 36 7/16 | 36 7/16 | 119 |
| CH422430 | 42 7/16 | 24 3/4 | 105 |
| CH423030 | 42 7/16 | 30 | 116 |
| CH423630 | 42 7/16 | 36 7/16 | 130 |
| CH482430 | 48 1/8 | 24 3/4 | 112 |
| CH483030 | 48 1/8 | 30 | 124 |
| CH483630 | 48 1/8 | 36 7/16 | 140 |
| CH552430 | 56 1/8 | 24 3/4 | 124 |
| CH553030 | 56 1/8 | 30 | 138 |
| CH553630 | 56 1/8 | 36 7/16 | 154 |
| CH602430 | 59 13/16 | 24 3/4 | 130 |
| CH603030 | 59 13/16 | 30 | 143 |
| CH603630 | 59 13/16 | 36 7/16 | 161 |
| CH692430 | 69 13/16 | 24 3/4 | 158 |
| CH693030 | 69 13/16 | 30 | 174 |
| CH693630 | 69 13/16 | 36 7/16 | 195 |
| CH722430 | 71 1/2 | 24 3/4 | 164 |
| CH723030 | 71 1/2 | 30 | 180 |
| CH723630 | 71 1/2 | 36 7/16 | 201 |
| CH842430 | 83 1/2 | 24 3/4 | 190 |
| CH843030 | 83 1/2 | 30 | 209 |
| CH843630 | 83 1/2 | 36 7/16 | 232 |

## 30" High Half-Shelf with 3" Clearance*

CH722430B

| MODEL # | WIDTH | DEPTH | WEIGHT |
|---|---|---|---|
| CH242430B | 24 3/4 | 24 3/4 | 85 |
| CH243030B | 24 3/4 | 30 | 94 |
| CH243630B | 24 3/4 | 36 7/16 | 105 |
| CH302430B | 30 | 24 3/4 | 91 |
| CH303030B | 30 | 30 | 101 |
| CH303630B | 30 | 36 7/16 | 113 |
| CH362430B | 36 7/16 | 24 3/4 | 101 |
| CH363030B | 36 7/16 | 30 | 112 |
| CH363630B | 36 7/16 | 36 7/16 | 124 |
| CH422430B | 42 7/16 | 24 3/4 | 110 |
| CH423030B | 42 7/16 | 30 | 121 |
| CH423630B | 42 7/16 | 36 7/16 | 135 |
| CH482430B | 48 1/8 | 24 3/4 | 118 |
| CH483030B | 48 1/8 | 30 | 130 |
| CH483630B | 48 1/8 | 36 7/16 | 145 |

## 30" High Half-Shelf with 3" Clearance* (con't.)

| MODEL # | WIDTH | DEPTH | WEIGHT |
|---|---|---|---|
| CH552430B | 56 1/8 | 24 3/4 | 130 |
| CH553030B | 56 1/8 | 30 | 143 |
| CH553630B | 56 1/8 | 36 7/16 | 161 |
| CH602430B | 59 13/16 | 24 3/4 | 135 |
| CH603030B | 59 13/16 | 30 | 149 |
| CH603630B | 59 13/16 | 36 7/16 | 166 |
| CH692430B | 69 13/16 | 24 3/4 | 165 |
| CH693030B | 69 13/16 | 30 | 180 |
| CH693630B | 69 13/16 | 36 7/16 | 201 |
| CH722430B | 71 1/2 | 24 3/4 | 169 |
| CH723030B | 71 1/2 | 30 | 186 |
| CH723630B | 71 1/2 | 36 7/16 | 207 |
| CH842430B | 83 1/2 | 24 3/4 | 196 |
| CH843030B | 83 1/2 | 30 | 216 |
| CH843630B | 83 1/2 | 36 7/16 | 239 |

## Options

| MODIFICATION | MODEL # CHANGE |
|---|---|
| Accepts wheels | CHwwdd30W |
| Adjustable legs | CHwwdd30A |
| 42″ height | CHwwdd42 |

## 36" High Half-Shelf with 9" Clearance*

CH363036

| MODEL # | WIDTH | DEPTH | WEIGHT |
|---|---|---|---|
| CH242436 | 24 3/4 | 24 3/4 | 88 |
| CH243036 | 24 3/4 | 30 | 98 |
| CH243636 | 24 3/4 | 36 7/16 | 110 |
| CH302436 | 30 | 24 3/4 | 96 |
| CH303036 | 30 | 30 | 107 |
| CH303636 | 30 | 36 7/16 | 120 |
| CH362436 | 36 7/16 | 24 3/4 | 106 |
| CH363036 | 36 7/16 | 30 | 117 |
| CH363636 | 36 7/16 | 36 7/16 | 131 |
| CH422436 | 42 7/16 | 24 3/4 | 114 |
| CH423036 | 42 7/16 | 30 | 127 |
| CH423636 | 42 7/16 | 36 7/16 | 142 |
| CH482436 | 48 1/8 | 24 3/4 | 123 |
| CH483036 | 48 1/8 | 30 | 136 |
| CH483636 | 48 1/8 | 36 7/16 | 153 |
| CH552436 | 56 1/8 | 4 3/4 | 135 |
| CH553036 | 56 1/8 | 30 | 150 |
| CH553636 | 56 1/8 | 36 7/16 | 167 |
| CH602436 | 59 13/16 | 24 3/4 | 141 |
| CH603036 | 59 13/16 | 30 | 155 |
| CH603636 | 59 13/16 | 36 7/16 | 174 |
| CH692436 | 69 13/16 | 24 3/4 | 172 |
| CH693036 | 69 13/16 | 30 | 189 |
| CH693636 | 69 13/16 | 36 7/16 | 210 |

## 36" High Half-Shelf with 9" Clearance* (con't.)

| MODEL # | WIDTH | DEPTH | WEIGHT |
|---|---|---|---|
| CH722436 | 71 1/2 | 24 3/4 | 177 |
| CH723036 | 71 1/2 | 30 | 195 |
| CH723636 | 71 1/2 | 36 7/16 | 218 |
| CH842436 | 83 1/2 | 24 3/4 | 205 |
| CH843036 | 83 1/2 | 30 | 228 |
| CH843636 | 83 1/2 | 36 7/16 | 250 |

## 36" High Half-Shelf with 3" Clearance

CH483036B

| MODEL # | WIDTH | DEPTH | WEIGHT |
|---|---|---|---|
| CH242436B | 24 3/4 | 24 3/4 | 94 |
| CH243036B | 24 3/4 | 30 | 103 |
| CH243636B | 24 3/4 | 36 7/16 | 116 |
| CH302436B | 30 | 24 3/4 | 101 |
| CH303036B | 30 | 30 | 112 |
| CH303636B | 30 | 36 7/16 | 125 |
| CH362436B | 36 7/16 | 24 3/4 | 111 |
| CH363036B | 36 7/16 | 30 | 122 |
| CH363636B | 36 7/16 | 36 7/16 | 136 |
| CH422436B | 42 7/16 | 24 3/4 | 120 |
| CH423036B | 42 7/16 | 30 | 132 |
| CH423636B | 42 7/16 | 36 7/16 | 147 |
| CH482436B | 48 1/8 | 24 3/4 | 129 |
| CH483036B | 48 1/8 | 30 | 142 |
| CH483636B | 48 1/8 | 36 7/16 | 158 |
| CH552436B | 56 1/8 | 4 3/4 | 141 |
| CH553036B | 56 1/8 | 30 | 155 |
| CH553636B | 56 1/8 | 36 7/16 | 174 |
| CH602436B | 59 13/16 | 24 3/4 | 146 |
| CH603036B | 59 13/16 | 30 | 161 |
| CH603636B | 59 13/16 | 36 7/16 | 179 |
| CH692436B | 69 13/16 | 24 3/4 | 178 |
| CH693036B | 69 13/16 | 30 | 195 |
| CH693636B | 69 13/16 | 36 7/16 | 217 |
| CH722436B | 71 1/2 | 24 3/4 | 183 |
| CH723036B | 71 1/2 | 30 | 201 |
| CH723636B | 71 1/2 | 36 7/16 | 224 |
| CH842436B | 83 1/2 | 24 3/4 | 210 |
| CH843036B | 83 1/2 | 30 | 231 |
| CH843636B | 83 1/2 | 36 7/16 | 255 |

## Options

| MODIFICATION | MODEL # CHANGE |
|---|---|
| Accepts wheels | CHwwdd36W |
| Adjustable legs | CHwwdd36A |
| 42″ height | CHwwdd42 |

## 30" High Full-Shelf with 9" Clearance

CS423630

| MODEL # | WIDTH | DEPTH | WEIGHT |
|---|---|---|---|
| CS242430 | 24 3/4 | 24 3/4 | 79 |
| CS243030 | 24 3/4 | 30 | 88 |
| CS243630 | 24 3/4 | 36 7/16 | 99 |
| CS302430 | 30 | 24 3/4 | 86 |
| CS303030 | 30 | 30 | 96 |
| CS303630 | 30 | 36 7/16 | 108 |
| CS362430 | 36 7/16 | 24 3/4 | 96 |
| CS363030 | 36 7/16 | 30 | 107 |
| CS363630 | 36 7/16 | 36 7/16 | 119 |
| CS422430 | 42 7/16 | 24 3/4 | 105 |
| CS423030 | 42 7/16 | 30 | 116 |
| CS423630 | 42 7/16 | 36 7/16 | 130 |
| CS482430 | 48 1/8 | 24 3/4 | 112 |
| CS483030 | 48 1/8 | 30 | 124 |
| CS483630 | 48 1/8 | 36 7/16 | 140 |
| CS552430 | 56 1/8 | 24 3/4 | 124 |
| CS553030 | 56 1/8 | 30 | 138 |
| CS553630 | 56 1/8 | 36 7/16 | 154 |
| CS602430 | 59 13/16 | 24 3/4 | 130 |
| CS603030 | 59 13/16 | 30 | 143 |
| CS603630 | 59 13/16 | 36 7/16 | 161 |
| CS692430 | 69 13/16 | 24 3/4 | 158 |
| CS693030 | 69 13/16 | 30 | 174 |
| CS693630 | 69 13/16 | 36 7/16 | 195 |
| CS722430 | 71 1/2 | 24 3/4 | 164 |
| CS723030 | 71 1/2 | 30 | 180 |
| CS723630 | 71 1/2 | 36 7/16 | 201 |
| CS842430 | 83 1/2 | 24 3/4 | 190 |
| CS843030 | 83 1/2 | 30 | 209 |
| CS843630 | 83 1/2 | 36 7/16 | 232 |

## 30" High Full-Shelf with 3" Clearance

CS603030B

| MODEL # | WIDTH | DEPTH | WEIGHT |
|---|---|---|---|
| CS242430B | 24 3/4 | 24 3/4 | 85 |
| CS243030B | 24 3/4 | 30 | 94 |
| CS243630B | 24 3/4 | 36 7/16 | 105 |
| CS302430B | 30 | 24 3/4 | 91 |
| CS303030B | 30 | 30 | 101 |
| CS303630B | 30 | 36 7/16 | 113 |
| CS362430B | 36 7/16 | 24 3/4 | 101 |
| CS363030B | 36 7/16 | 30 | 112 |
| CS363630B | 36 7/16 | 36 7/16 | 124 |
| CS422430B | 42 7/16 | 24 3/4 | 110 |
| CS423030B | 42 7/16 | 30 | 121 |
| CS423630B | 42 7/16 | 36 7/16 | 135 |
| CS482430B | 48 1/8 | 24 3/4 | 118 |
| CS483030B | 48 1/8 | 30 | 130 |
| CS483630B | 48 1/8 | 36 7/16 | 145 |

## 30" High Full-Shelf with 3" Clearance (con't.)

| MODEL # | WIDTH | DEPTH | WEIGHT |
|---|---|---|---|
| CS552430B | 56 1/8 | 24 3/4 | 130 |
| CS553030B | 56 1/8 | 30 | 143 |
| CS553630B | 56 1/8 | 36 7/16 | 161 |
| CS602430B | 59 13/16 | 24 3/4 | 135 |
| CS603030B | 59 13/16 | 30 | 149 |
| CS603630B | 59 13/16 | 36 7/16 | 166 |
| CS692430B | 69 13/16 | 24 3/4 | 165 |
| CS693030B | 69 13/16 | 30 | 180 |
| CS693630B | 69 13/16 | 36 7/16 | 201 |
| CS722430B | 71 1/2 | 24 3/4 | 169 |
| CS723030B | 71 1/2 | 30 | 186 |
| CS723630B | 71 1/2 | 36 7/16 | 207 |
| CS842430B | 83 1/2 | 24 3/4 | 196 |
| CS843030B | 83 1/2 | 30 | 216 |
| CS843630B | 83 1/2 | 36 7/16 | 239 |

## Options

| MODIFICATION | MODEL # CHANGE |
|---|---|
| Accepts wheels | CSwwdd30W |
| Adjustable legs | CSwwdd30A |

## 36" High Full-Shelf with 9" Clearance

CS422436

| MODEL # | WIDTH | DEPTH | WEIGHT |
|---|---|---|---|
| CS242436 | 24 3/4 | 24 3/4 | 96 |
| CS243036 | 24 3/4 | 30 | 107 |
| CS243636 | 24 3/4 | 36 7/16 | 120 |
| CS302436 | 30 | 24 3/4 | 106 |
| CS303036 | 30 | 30 | 118 |
| CS303636 | 30 | 36 7/16 | 132 |
| CS362436 | 36 7/16 | 24 3/4 | 117 |
| CS363036 | 36 7/16 | 30 | 130 |
| CS363636 | 36 7/16 | 36 7/16 | 146 |
| CS422436 | 42 7/16 | 24 3/4 | 128 |
| CS423036 | 42 7/16 | 30 | 142 |
| CS423636 | 42 7/16 | 36 7/16 | 160 |
| CS482436 | 48 1/8 | 24 3/4 | 139 |
| CS483036 | 48 1/8 | 30 | 154 |
| CS483636 | 48 1/8 | 36 7/16 | 173 |
| CS552436 | 56 1/8 | 24 3/4 | 153 |
| CS553036 | 56 1/8 | 30 | 169 |
| CS553636 | 56 1/8 | 36 7/16 | 190 |
| CS602436 | 59 13/16 | 24 3/4 | 160 |
| CS603036 | 59 13/16 | 30 | 177 |
| CS603636 | 59 13/16 | 36 7/16 | 198 |
| CS692436 | 69 13/16 | 24 3/4 | 196 |
| CS693036 | 69 13/16 | 30 | 217 |
| CS693636 | 69 13/16 | 36 7/16 | 243 |
| CS722436 | 71 1/2 | 24 3/4 | 202 |

## 36" High Full-Shelf with 9" Clearance (con't.)

| MODEL # | WIDTH | DEPTH | WEIGHT |
|---|---|---|---|
| CS723036 | 71 1/2 | 30 | 224 |
| CS723636 | 71 1/2 | 36 7/16 | 251 |
| CS842436 | 83 1/2 | 24 3/4 | 234 |
| CS843036 | 83 1/2 | 30 | 259 |
| CS843636 | 83 1/2 | 36 7/16 | 288 |

## 36" High Full-Shelf with 3" Clearance

CS603636B

| MODEL # | WIDTH | DEPTH | WEIGHT |
|---|---|---|---|
| CS242436B | 24 3/4 | 24 3/4 | 112 |
| CS243036B | 24 3/4 | 30 | 125 |
| CS243636B | 24 3/4 | 36 7/16 | 130 |
| CS302436B | 30 | 24 3/4 | 123 |
| CS303036B | 30 | 30 | 138 |
| CS303636B | 30 | 36 7/16 | 144 |
| CS362436B | 36 7/16 | 24 3/4 | 135 |
| CS363036B | 36 7/16 | 30 | 152 |
| CS363636B | 36 7/16 | 36 7/16 | 158 |
| CS422436B | 42 7/16 | 24 3/4 | 147 |
| CS423036B | 42 7/16 | 30 | 165 |
| CS423636B | 42 7/16 | 36 7/16 | 173 |
| CS482436B | 48 1/8 | 24 3/4 | 160 |
| CS483036B | 48 1/8 | 30 | 178 |
| CS483636B | 48 1/8 | 36 7/16 | 211 |
| CS552436B | 56 1/8 | 24 3/4 | 175 |
| CS553036B | 56 1/8 | 30 | 196 |
| CS553636B | 56 1/8 | 36 7/16 | 232 |
| CS602436B | 59 13/16 | 24 3/4 | 183 |
| CS603036B | 59 13/16 | 30 | 204 |
| CS603636B | 59 13/16 | 36 7/16 | 242 |
| CS692436B | 69 13/16 | 24 3/4 | 202 |
| CS693036B | 69 13/16 | 30 | 227 |
| CS693636B | 69 13/16 | 36 7/16 | 268 |
| CS722436B | 71 1/2 | 24 3/4 | 209 |
| CS723036B | 71 1/2 | 30 | 233 |
| CS723636B | 71 1/2 | 36 7/16 | 276 |
| CS842436B | 83 1/2 | 24 3/4 | 241 |
| CS843036B | 83 1/2 | 30 | 267 |
| CS843636B | 83 1/2 | 36 7/16 | 316 |

## Options

| MODIFICATION | MODEL # CHANGE | PRICE |
|---|---|---|
| Accepts wheels | CSwwdd36W | None |
| Adjustable legs | CSwwdd36A | 38 |
| 42" height | CSwwdd42 | 107 |

## 30" Cabinet with 9" Clearance

CC302430

| MODEL # | WIDTH | DEPTH | WEIGHT |
|---|---|---|---|
| CC242430 | 24 3/4 | 24 3/4 | 94 |
| CC243030 | 24 3/4 | 30 | 103 |
| CC243630 | 24 3/4 | 36 7/16 | 116 |
| CC302430 | 30 | 24 3/4 | 103 |
| CC303030 | 30 | 30 | 114 |
| CC303630 | 30 | 36 7/16 | 129 |
| CC362430 | 36 7/16 | 24 3/4 | 117 |
| CC363030 | 36 7/16 | 30 | 129 |
| CC363630 | 36 7/16 | 36 7/16 | 144 |
| CC422430 | 42 7/16 | 24 3/4 | 129 |
| CC423030 | 42 7/16 | 30 | 142 |
| CC423630 | 42 7/16 | 36 7/16 | 158 |
| CC482430 | 48 1/8 | 24 3/4 | 140 |
| CC483030 | 48 1/8 | 30 | 154 |
| CC483630 | 48 1/8 | 36 7/16 | 172 |
| CC552430 | 56 1/8 | 24 3/4 | 156 |
| CC553030 | 56 1/8 | 30 | 172 |
| CC553630 | 56 1/8 | 36 7/16 | 191 |
| CC602430 | 59 13/16 | 24 3/4 | 164 |
| CC603030 | 59 13/16 | 30 | 180 |
| CC603630 | 59 13/16 | 36 7/16 | 200 |
| CC692430 | 69 13/16 | 24 3/4 | 202 |
| CC693030 | 69 13/16 | 30 | 221 |
| CC693630 | 69 13/16 | 36 7/16 | 246 |
| CC722430 | 71 1/2 | 24 3/4 | 209 |
| CC723030 | 71 1/2 | 30 | 221 |
| CC723630 | 71 1/2 | 36 7/16 | 254 |
| CC842430 | 83 1/2 | 24 3/4 | 243 |
| CC843030 | 83 1/2 | 30 | 266 |
| CC843630 | 83 1/2 | 36 7/16 | 295 |

## 30" Cabinet with 3" Clearance

CC603030B

| MODEL # | WIDTH | DEPTH | WEIGHT |
|---|---|---|---|
| CC242430B | 24 3/4 | 24 3/4 | 99 |
| CC243030B | 24 3/4 | 30 | 109 |
| CC243630B | 24 3/4 | 36 7/16 | 121 |
| CC302430B | 30 | 24 3/4 | 109 |
| CC303030B | 30 | 30 | 120 |
| CC303630B | 30 | 36 7/16 | 134 |
| CC362430B | 36 7/16 | 24 3/4 | 122 |
| CC363030B | 36 7/16 | 30 | 134 |
| CC363630B | 36 7/16 | 36 7/16 | 150 |
| CC422430B | 42 7/16 | 24 3/4 | 134 |
| CC423030B | 42 7/16 | 30 | 147 |
| CC423630B | 42 7/16 | 36 7/16 | 164 |
| CC482430B | 48 1/8 | 24 3/4 | 145 |
| CC483030B | 48 1/8 | 30 | 160 |
| CC483630B | 48 1/8 | 36 7/16 | 177 |

## 30" Cabinet with 3" Clearance (con't.)

| MODEL # | WIDTH | DEPTH | WEIGHT |
|---|---|---|---|
| CC552430B | 56 1/8 | 24 3/4 | 162 |
| CC553030B | 56 1/8 | 30 | 177 |
| CC553630B | 56 1/8 | 36 7/16 | 197 |
| CC602430B | 59 13/16 | 24 3/4 | 169 |
| CC603030B | 59 13/16 | 30 | 186 |
| CC603630B | 59 13/16 | 36 7/16 | 206 |
| CC692430B | 69 13/16 | 24 3/4 | 208 |
| CC693030B | 69 13/16 | 30 | 228 |
| CC693630B | 69 13/16 | 36 7/16 | 253 |
| CC722430B | 71 1/2 | 24 3/4 | 216 |
| CC723030B | 71 1/2 | 30 | 234 |
| CC723630B | 71 1/2 | 36 7/16 | 261 |
| CC842430B | 83 1/2 | 24 3/4 | 250 |
| CC843030B | 83 1/2 | 30 | 273 |
| CC843630B | 83 1/2 | 36 7/16 | 301 |

## Options

| MODIFICATION | MODEL # CHANGE |
|---|---|
| Accepts wheels | CCwwdd30W |
| Adjustable legs | CCwwdd30A |

## 36" Cabinet with 9" Clearance

CC363036

| MODEL # | WIDTH | DEPTH | WEIGHT |
|---|---|---|---|
| CC242436 | 24 3/4 | 24 3/4 | 103 |
| CC243036 | 24 3/4 | 30 | 116 |
| CC243636 | 24 3/4 | 36 7/16 | 129 |
| CC302436 | 30 | 24 3/4 | 116 |
| CC303036 | 30 | 30 | 128 |
| CC303636 | 30 | 36 7/16 | 142 |
| CC362436 | 36 7/16 | 24 3/4 | 127 |
| CC363036 | 36 7/16 | 30 | 142 |
| CC363636 | 36 7/16 | 36 7/16 | 158 |
| CC422436 | 42 7/16 | 24 3/4 | 142 |
| CC423036 | 42 7/16 | 30 | 156 |
| CC423636 | 42 7/16 | 36 7/16 | 174 |
| CC482436 | 48 1/8 | 24 3/4 | 154 |
| CC483036 | 48 1/8 | 30 | 169 |
| CC483636 | 48 1/8 | 36 7/16 | 188 |
| CC552436 | 56 1/8 | 24 3/4 | 172 |
| CC553036 | 56 1/8 | 30 | 188 |
| CC553636 | 56 1/8 | 36 7/16 | 209 |
| CC602436 | 59 13/16 | 24 3/4 | 179 |
| CC603036 | 59 13/16 | 30 | 197 |
| CC603636 | 59 13/16 | 36 7/16 | 218 |
| CC692436 | 69 13/16 | 24 3/4 | 221 |
| CC693036 | 69 13/16 | 30 | 242 |
| CC693636 | 69 13/16 | 36 7/16 | 267 |
| CC722436 | 71 1/2 | 24 3/4 | 229 |

## 36" Cabinet with 9" Clearance (con't.)

| MODEL # | WIDTH | DEPTH | WEIGHT |
|---|---|---|---|
| CC723036 | 71 1/2 | 30 | 250 |
| CC723636 | 71 1/2 | 36 7/16 | 276 |
| CC842436 | 83 1/2 | 24 3/4 | 265 |
| CC843036 | 83 1/2 | 30 | 289 |
| CC843636 | 83 1/2 | 36 7/16 | 319 |

## 36" Cabinet with 3" Clearance

CC603036B

| MODEL # | WIDTH | DEPTH | WEIGHT |
|---|---|---|---|
| CC242436B | 24 3/4 | 24 3/4 | 120 |
| CC243036B | 24 3/4 | 30 | 130 |
| CC243636B | 24 3/4 | 36 7/16 | 134 |
| CC302436B | 30 | 24 3/4 | 130 |
| CC303036B | 30 | 30 | 140 |
| CC303636B | 30 | 36 7/16 | 147 |
| CC362436B | 36 7/16 | 24 3/4 | 150 |
| CC363036B | 36 7/16 | 30 | 160 |
| CC363636B | 36 7/16 | 36 7/16 | 164 |
| CC422436B | 42 7/16 | 24 3/4 | 155 |
| CC423036B | 42 7/16 | 30 | 170 |
| CC423636B | 42 7/16 | 36 7/16 | 179 |
| CC482436B | 48 1/8 | 24 3/4 | 170 |
| CC483036B | 48 1/8 | 30 | 190 |
| CC483636B | 48 1/8 | 36 7/16 | 210 |
| CC552436B | 56 1/8 | 24 3/4 | 177 |
| CC553036B | 56 1/8 | 30 | 194 |
| CC553636B | 56 1/8 | 36 7/16 | 215 |
| CC602436B | 59 13/16 | 24 3/4 | 185 |
| CC603036B | 59 13/16 | 30 | 202 |
| CC603636B | 59 13/16 | 36 7/16 | 223 |
| CC692436B | 69 13/16 | 24 3/4 | 228 |
| CC693036B | 69 13/16 | 30 | 249 |
| CC693636B | 69 13/16 | 36 7/16 | 274 |
| CC722436B | 71 1/2 | 24 3/4 | 234 |
| CC723036B | 71 1/2 | 30 | 255 |
| CC723636B | 71 1/2 | 36 7/16 | 282 |
| CC842436B | 83 1/2 | 24 3/4 | 271 |
| CC843036B | 83 1/2 | 30 | 295 |
| CC843636B | 83 1/2 | 36 7/16 | 326 |

## Options

| MODIFICATION | MODEL # CHANGE |
|---|---|
| Accepts wheels | CCwwdd30W |
| Adjustable legs | CCwwdd30A |
| 42" height | CCwwdd42 |

## 30″ High Center Mount Modesty

CX483630

| MODEL # | WIDTH | DEPTH | WEIGHT |
|---|---|---|---|
| CX303030 | 30 | 30 | 92 |
| CX303630 | 30 | 36 7/16 | 102 |
| CX363030 | 36 7/16 | 30 | 100 |
| CX363630 | 36 7/16 | 36 7/16 | 111 |
| CX423030 | 42 7/16 | 30 | 108 |
| CX423630 | 42 7/16 | 36 7/16 | 120 |
| CX483030 | 48 1/8 | 30 | 116 |
| CX483630 | 48 1/8 | 36 7/16 | 128 |
| CX484830 | 48 1/8 | 48 | 150 |
| CX553030 | 56 1/8 | 30 | 125 |
| CX553630 | 56 1/8 | 36 7/16 | 139 |
| CX554830 | 56 1/8 | 48 | 163 |
| CX603030 | 59 13/16 | 30 | 130 |
| CX603630 | 59 13/16 | 36 7/16 | 144 |
| CX604830 | 59 13/16 | 48 | 168 |
| CX693030 | 69 13/16 | 30 | 150 |
| CX693630 | 69 13/16 | 36 7/16 | 167 |
| CX694830 | 69 13/16 | 48 | 197 |
| CX723030 | 71 1/2 | 30 | 155 |
| CX723630 | 71 1/2 | 36 7/16 | 172 |
| CX724830 | 71 1/2 | 48 | 209 |
| CX843030 | 83 1/2 | 30 | 179 |
| CX843630 | 83 1/2 | 36 7/16 | 197 |
| CX844830 | 83 1/2 | 48 | 236 |

## 36″ High Center Mount Modesty

CX484836

| MODEL # | WIDTH | DEPTH | WEIGHT |
|---|---|---|---|
| CX303036 | 30 | 30 | 102 |
| CX303636 | 30 | 36 7/16 | 114 |
| CX363036 | 36 7/16 | 30 | 111 |
| CX363636 | 36 7/16 | 36 7/16 | 123 |
| CX423036 | 42 7/16 | 30 | 119 |
| CX423636 | 42 7/16 | 36 7/16 | 132 |
| CX483036 | 48 1/8 | 30 | 127 |
| CX483636 | 48 1/8 | 36 7/16 | 141 |
| CX484836 | 48 1/8 | 48 | 165 |
| CX553036 | 56 1/8 | 30 | 138 |
| CX553636 | 56 1/8 | 36 7/16 | 152 |
| CX554836 | 56 1/8 | 48 | 178 |
| CX603036 | 59 13/16 | 30 | 142 |
| CX603636 | 59 13/16 | 36 7/16 | 157 |
| CX604836 | 59 13/16 | 48 | 185 |
| CX693036 | 69 13/16 | 30 | 165 |
| CX693636 | 69 13/16 | 36 7/16 | 183 |
| CX694836 | 69 13/16 | 48 | 221 |
| CX723036 | 71 1/2 | 30 | 169 |
| CX723636 | 71 1/2 | 36 7/16 | 188 |
| CX724836 | 71 1/2 | 48 | 226 |
| CX843036 | 83 1/2 | 30 | 195 |
| CX843636 | 83 1/2 | 36 7/16 | 215 |
| CX844836 | 83 1/2 | 48 | 253 |

When modifying the door clearance and adding shelves or cabinets to a CX console, specify clear-ance first and shelf/cabinet second. For example, a CX603030 with optional 3″ clearance and front cabinet is specified as CX603030BD.

Contact HAMILTON for the constraints of wheels on CX consoles.

## Options

| MODEL # | DESCRIPTION |
|---|---|
| Hx | Front Shelf |
| HH | Front & Back Shelf |
| Dx | Front Cabinet |
| DD | Front & Back Cabinet |
| DH | Front Cabinet & Back Shelf |
| Bx | 3" Clearance |

**Doors indicated by “D” and require handle specification

# Specialty Consoles

## How to Specify Your Options

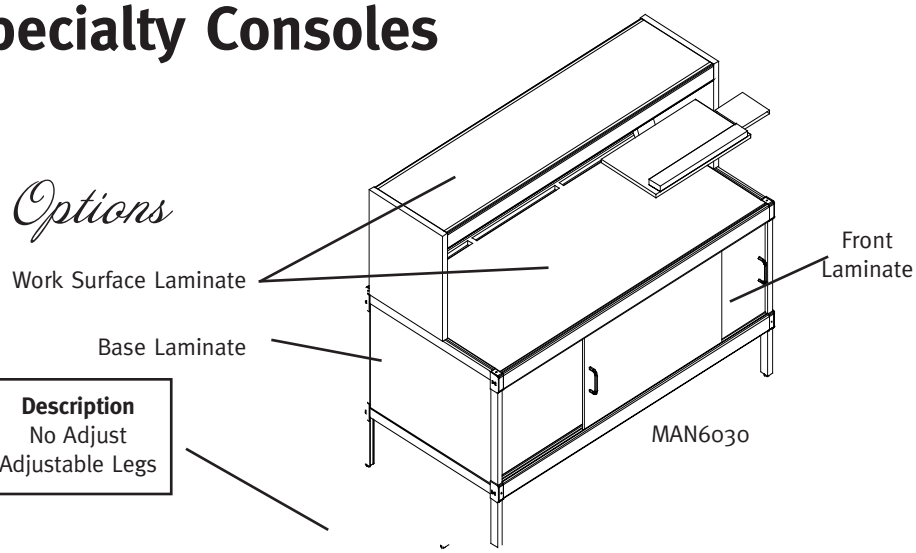


**MANIFEST SHIPPING CONSOLE**

| Model | Description |
|---|---|
| x | No Adjust |
| A | Adjustable Legs |

Manifest Shipping Console — Depth — Adjustable Legs

**M A N 6 0 3 0 L A - W P**

Width — Top Finish — Handle Options

| Model | Description |
|---|---|
| L | Laminate |
| A | ABS |
| S | Stainless Steel |

**Handle Options†**

| Model | Description |
|---|---|
| EL | Elliptical Black |
| ES | Elliptical Silver |
| CB | Crescent Black |
| CS | Crescent Silver |
| TC | Textured Crescent |
| FC | Flared Crescent |
| WP | Wired Pull (MR zinc) |
| SP | Special Handle |

†Recessed and bar not available on all units.

See page 60 for color codes.

## Notes

1. If you need a shipping console with a 3″ floor clearance or with a 36″ console height, you must order each component separately (console, platform and keyboard tray.)

2. Shipping stations are shipped knocked down. When getting freight quotes, specify Class 85. If dimensions are required, use 10″ for the height of the box and add 3″ to the width and depth of the console.

**CRANK ADJUSTABLE CONSOLE**

| Model | Description |
|---|---|
| x | No Wheels |
| W | With Wheels |

*Available on 30” and 36” widths only
*Wheels are sold separately

Adjustable Console — Depth — **Adjustable** Crank = ADJ Electric = ELE — Wheels

**C T 3 0 3 0 2 4 A D J L W**

Width — Height — Top Finish

| Model | Description |
|---|---|
| L | Laminate |
| A | ABS |
| S | Stainless Steel |

# Specialty Consoles

## Manifest Shipping

MAN4830

| MODEL # | WIDTH | DEPTH | HEIGHT | WEIGHT |
|---|---|---|---|---|
| MAN4830 | 48 1/8 | 30 | 48 | 211 |
| MAN6030 | 59 13/16 | 30 | 48 | 251 |
| MAN7230 | 71 1/2 | 30 | 48 | 286 |

Manifest Shipping Stations include a 30″d x 30″h cabinet console with a 9″ floor clearance, three grommets in the rear of the worksurface, two cable cutouts in the back panel, and a 17 5/8 deep heavy-duty platform with an 8″ high back panel. There is an open space between the back panel and the aluminum extrusion for cable management; and a keyboard tray with mousepad.

## Packaging Station

PAC7230

| MODEL # | WIDTH | DEPTH | HEIGHT | WEIGHT |
|---|---|---|---|---|
| PAC7230 | 71 1/2 | 30 | 48 | 318 |

Packaging Station consists of a CC723030 with ABS top, E721618 and four VLPT3030.

## Options

| MODIFICATION | MODEL # CHANGE |
|---|---|
| Adjustable legs | xxxwwddA |

## Crank Adjustable

CT303024ADJ

| MODEL # | WIDTH | DEPTH | HEIGHT | WEIGHT |
|---|---|---|---|---|
| CT303024ADJ | 30 | 30 | 28-40 | 187 |
| CT363024ADJ | 36 7/16 | 30 | 28-40 | 195 |
| CT483024ADJ | 48 1/8 | 30 | 28-40 | 202 |
| CT603024ADJ | 59 13/16 | 30 | 28-40 | 224 |

## Electric Adjustable

CT363024ELE

| MODEL # | WIDTH | DEPTH | HEIGHT | WEIGHT |
|---|---|---|---|---|
| CT303024ELE | 30 | 30 | 28-40 | 187 |
| CT363024ELE | 36 7/16 | 30 | 28-40 | 195 |
| CT483024ELE | 48 1/8 | 30 | 28-40 | 202 |
| CT603024ELE | 59 13/16 | 30 | 28-40 | 224 |

## Accessories

| MODEL # | DESCRIPTION |
|---|---|
| WHL-ADJ | Set of 4 wheels for adjustable console<br>Available for 30″ and 36″ widths only |

## Adjustable Scale

SU263030

| MODEL # | WIDTH | DEPTH | HEIGHT | WEIGHT |
|---|---|---|---|---|
| SU263030 | 26 | 30 | 30 | 90 |
| SU263630 | 26 | 36 7/16 | 30 | 100 |
| SU263036 | 26 | 30 | 36 | 100 |
| SU263636 | 26 | 36 7/16 | 36 | 110 |

## Platforms for Adjustable Scale

E262612

| MODEL # | WIDTH | DEPTH | HEIGHT | WEIGHT |
|---|---|---|---|---|
| E261612 | 26 | 16 7/8 | 12 | 27 |
| E261618 | 26 | 16 7/8 | 18 | 33 |

## Options

| MODIFICATION | MODEL # CHANGE |
|---|---|
| Aluminum extrusion platform | E2616hhM |
| Drill top for wire dividers | E2616hhD |

## With Rollers

CR363630

| MODEL # | WIDTH | DEPTH | HEIGHT | WEIGHT |
|---|---|---|---|---|
| CR363030 | 36 7/16 | 30 | 30 | 98 |
| CR363036 | 36 7/16 | 30 | 36 | 108 |
| CR363630 | 36 7/16 | 36 7/16 | 30 | 108 |
| CR363636 | 36 7/16 | 36 7/16 | 36 | 119 |
| CR483030 | 48 1/8 | 30 | 30 | 116 |
| CR483036 | 48 1/8 | 30 | 36 | 126 |
| CR483630 | 48 1/8 | 36 7/16 | 30 | 127 |
| CR483636 | 48 1/8 | 36 7/16 | 36 | 139 |
| CR603030 | 59 13/16 | 30 | 30 | 133 |
| CR603036 | 59 13/16 | 30 | 36 | 144 |
| CR603630 | 59 13/16 | 36 7/16 | 30 | 146 |
| CR603636 | 59 13/16 | 36 7/16 | 36 | 158 |
| CR723030 | 71 1/2 | 30 | 30 | 152 |
| CR723036 | 71 1/2 | 30 | 36 | 164 |
| CR723630 | 71 1/2 | 36 7/16 | 30 | 166 |
| CR723636 | 71 1/2 | 36 7/16 | 36 | 164 |
| CR843030 | 83 1/2 | 30 | 30 | 176 |
| CR843036 | 83 1/2 | 30 | 36 | 189 |
| CR843630 | 83 1/2 | 36 7/16 | 30 | 186 |
| CR843636 | 83 1/2 | 36 7/16 | 36 | 205 |

# Intermediate Shelf for Console

## *How to Specify Your Options*

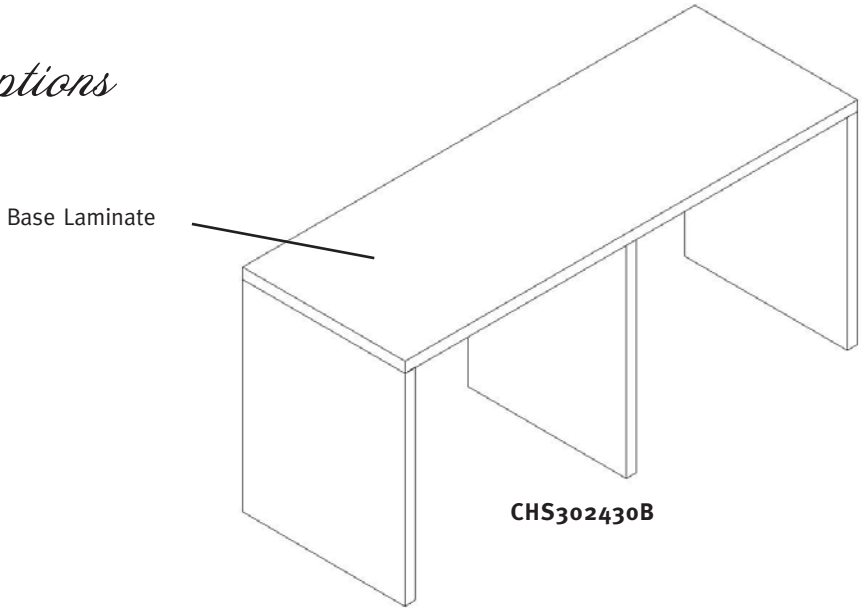


**Type of Shelf**
CH = Half Shelf
CF = Full Shelf

**Clearance Option**
B = 3″
Clearance
x = 9″
Clearance

**C H S 6 0 3 6 3 0 B - I**

Dimensions of Console for Shelf

Intermediate Shelf

See page 60 for color codes.

## *Notes*

1. Intermediate shelves are not fastened to the console shelf and can be removed.

2. Shelves are sent with double-faced adhesive tape for optional fastening.

3. Shelves 54″ or wider feature a center leg for additional support.

4. Intermediate shelves are shipped knocked down. When getting freight quotes, specify Class 85. If dimensions are required, use 6″ for height and add 3″ to width and depth for packing materials.

5. Modifications may be made to the width, depth and height.

# *Intermediate Shelf Consoles*

## 30" Half-Depth with 9" Clearance

CHS603030-I

| MODEL # | WIDTH | DEPTH | WEIGHT |
|---|---|---|---|
| CHS242430-I | 22 11/16 | 24 3/4 | 12 |
| CHS243030-I | 22 11/16 | 30 | 13 |
| CHS243630-I | 22 11/16 | 36 7/16 | 15 |
| CHS302430-I | 27 15/16 | 24 3/4 | 12 |
| CHS303030-I | 27 15/16 | 30 | 14 |
| CHS303630-I | 27 15/16 | 36 7/16 | 17 |
| CHS362430-I | 34 3/8 | 24 3/4 | 13 |
| CHS363030-I | 34 3/8 | 30 | 15 |
| CHS363630-I | 34 3/8 | 36 7/16 | 18 |
| CHS422430-I | 40 3/8 | 24 3/4 | 14 |
| CHS423030-I | 40 3/8 | 30 | 17 |
| CHS423630-I | 40 3/8 | 36 7/16 | 20 |
| CHS482430-I | 46 1/16 | 24 3/4 | 14 |
| CHS483030-I | 46 1/16 | 30 | 18 |
| CHS483630-I | 46 1/16 | 36 7/16 | 21 |
| CHS552430-I | 54 | 24 3/4 | 18 |
| CHS553030-I | 54 | 30 | 21 |
| CHS553630-I | 54 | 36 7/16 | 25 |
| CHS602430-I | 57 3/4 | 24 3/4 | 18 |
| CHS603030-I | 57 3/4 | 30 | 22 |
| CHS603630-I | 57 3/4 | 36 7/16 | 26 |
| CHS692430-I | 67 3/4 | 24 3/4 | 20 |
| CHS693030-I | 67 3/4 | 30 | 24 |
| CHS693630-I | 67 3/4 | 36 7/16 | 29 |
| CHS722430-I | 69 3/8 | 24 3/4 | 20 |
| CHS723030-I | 69 3/8 | 30 | 24 |
| CHS723630-I | 69 3/8 | 36 7/16 | 29 |
| CHS842430-I | 81 3/8 | 24 3/4 | 21 |
| CHS843030-I | 81 3/8 | 30 | 26 |
| CHS843630-I | 81 3/8 | 36 7/16 | 32 |

All half-depth intermediate shelves for 30″ consoles with 9″ clearance have a height of 8½″.

## 30" Half-Depth with 3" Clearance

CHS3024308-I

| MODEL # | WIDTH | DEPTH | WEIGHT |
|---|---|---|---|
| CHS242430B-I | 22 11/16 | 24 3/4 | 19 |
| CHS243030B-I | 22 11/16 | 30 | 22 |
| CHS243630B-I | 22 11/16 | 36 7/16 | 24 |
| CHS302430B-I | 27 15/16 | 24 3/4 | 20 |
| CHS303030B-I | 27 15/16 | 30 | 23 |
| CHS303630B-I | 27 15/16 | 36 7/16 | 25 |
| CHS362430B-I | 34 3/8 | 24 3/4 | 21 |
| CHS363030B-I | 34 3/8 | 30 | 23 |
| CHS363630B-I | 34 3/8 | 36 7/16 | 26 |
| CHS422430B-I | 40 3/8 | 24 3/4 | 22 |
| CHS423030B-I | 40 3/8 | 30 | 25 |
| CHS423630B-I | 40 3/8 | 36 7/16 | 29 |

## 30" Half-Depth with 3" Clearance (con't.)

| MODEL # | WIDTH | DEPTH | WEIGHT |
|---|---|---|---|
| CHS482430B-I | 46 1/16 | 24 3/4 | 22 |
| CHS483030B-I | 46 1/16 | 30 | 25 |
| CHS483630B-I | 46 1/16 | 36 7/16 | 30 |
| CHS552430B-I | 54 | 24 3/4 | 25 |
| CHS553030B-I | 54 | 30 | 31 |
| CHS553630B-I | 54 | 36 7/16 | 35 |
| CHS602430B-I | 57 3/4 | 24 3/4 | 26 |
| CHS603030B-I | 57 3/4 | 30 | 32 |
| CHS603630B-I | 57 3/4 | 36 7/16 | 36 |
| CHS692430B-I | 67 3/4 | 24 3/4 | 28 |
| CHS693030B-I | 67 3/4 | 30 | 33 |
| CHS693630B-I | 67 3/4 | 36 7/16 | 39 |
| CHS722430B-I | 69 3/8 | 24 3/4 | 29 |
| CHS723030B-I | 69 3/8 | 30 | 34 |
| CHS723630B-I | 69 3/8 | 36 7/16 | 40 |
| CHS842430B-I | 81 3/8 | 24 3/4 | 30 |
| CHS843030B-I | 81 3/8 | 30 | 36 |
| CHS843630B-I | 81 3/8 | 36 7/16 | 42 |

All half-depth intermediate shelves for 30″ consoles with 3″ clearance have a height of 13″.

## 36" Half-Depth with 9" Clearance



CHS302436-I

| MODEL # | WIDTH | DEPTH | WEIGHT |
|---|---|---|---|
| CHS242436-I | 22 11/16 | 10 | 13 |
| CHS243036-I | 22 11/16 | 13 | 17 |
| CHS243636-I | 22 11/16 | 16 | 19 |
| CHS302436-I | 27 15/16 | 10 | 14 |
| CHS303036-I | 27 15/16 | 13 | 18 |
| CHS303636-I | 27 15/16 | 16 | 20 |
| CHS362436-I | 34 3/8 | 10 | 15 |
| CHS363036-I | 34 3/8 | 13 | 18 |
| CHS363636-I | 34 3/8 | 16 | 21 |
| CHS422436-I | 40 3/8 | 10 | 17 |
| CHS423036-I | 40 3/8 | 13 | 20 |
| CHS423636-I | 40 3/8 | 16 | 23 |
| CHS482436-I | 46 1/16 | 10 | 17 |
| CHS483036-I | 46 1/16 | 13 | 20 |
| CHS483636-I | 46 1/16 | 16 | 24 |
| CHS552436-I | 54 | 10 | 20 |
| CHS553036-I | 54 | 13 | 25 |
| CHS553636-I | 54 | 16 | 30 |
| CHS602436-I | 57 3/4 | 10 | 21 |
| CHS603036-I | 57 3/4 | 13 | 26 |
| CHS603636-I | 57 3/4 | 16 | 31 |
| CHS692436-I | 67 3/4 | 10 | 22 |
| CHS693036-I | 67 3/4 | 13 | 28 |
| CHS693636-I | 67 3/4 | 16 | 33 |
| CHS722436-I | 69 3/8 | 10 | 23 |
| CHS723036-I | 69 3/8 | 13 | 29 |

## 36" Half-Depth with 9" Clearance (con't.)

| MODEL # | WIDTH | DEPTH | WEIGHT |
|---|---|---|---|
| CHS723636-I | 69 3/8 | 16 | 34 |
| CHS842436-I | 81 3/8 | 10 | 24 |
| CHS843036-I | 81 3/8 | 13 | 31 |
| CHS843636-I | 81 3/8 | 16 | 36 |

All half-depth intermediate shelves for 36″ consoles with 9″ clearance have a height of 13″.

## 36" Half-Depth with 3" Clearance

CHS603036B-I

| MODEL # | WIDTH | DEPTH | WEIGHT |
|---|---|---|---|
| CHS242436B-I | 22 11/16 | 10 | 18 |
| CHS243036B-I | 22 11/16 | 13 | 19 |
| CHS243636B-I | 22 11/16 | 16 | 21 |
| CHS302436B-I | 27 15/16 | 10 | 18 |
| CHS303036B-I | 27 15/16 | 13 | 20 |
| CHS303636B-I | 27 15/16 | 16 | 22 |
| CHS362436B-I | 34 3/8 | 10 | 19 |
| CHS363036B-I | 34 3/8 | 13 | 21 |
| CHS363636B-I | 34 3/8 | 16 | 23 |
| CHS422436B-I | 40 3/8 | 10 | 20 |
| CHS423036B-I | 40 3/8 | 13 | 22 |
| CHS423636B-I | 40 3/8 | 16 | 25 |
| CHS482436B-I | 46 1/16 | 10 | 20 |
| CHS483036B-I | 46 1/16 | 13 | 23 |
| CHS483636B-I | 46 1/16 | 16 | 26 |
| CHS552436B-I | 54 | 10 | 23 |
| CHS553036B-I | 54 | 13 | 26 |
| CHS553636B-I | 54 | 16 | 31 |
| CHS602436B-I | 57 3/4 | 10 | 23 |
| CHS603036B-I | 57 3/4 | 13 | 28 |
| CHS603636B-I | 57 3/4 | 16 | 32 |
| CHS692436B-I | 67 3/4 | 10 | 25 |
| CHS693036B-I | 67 3/4 | 13 | 30 |
| CHS693636B-I | 67 3/4 | 16 | 34 |
| CHS722436B-I | 69 3/8 | 10 | 25 |
| CHS723036B-I | 69 3/8 | 13 | 30 |
| CHS723636B-I | 69 3/8 | 16 | 34 |
| CHS842436B-I | 81 3/8 | 10 | 26 |
| CHS843036B-I | 81 3/8 | 13 | 32 |
| CHS843636B-I | 81 3/8 | 16 | 37 |

All half-depth intermediate shelves for 36″ consoles with 3″ clearance have a height of 17″.

## Options

| MODIFICATION | MODEL # CHANGE |
|---|---|
| For 42" h consoles | CHSwwdd 42-I |

## 30" Full-Depth with 9" Clearance

CFS243630-I

| MODEL # | WIDTH | DEPTH | WEIGHT |
|---|---|---|---|
| CFS242430-I | 22 11/16 | 20 | 18 |
| CFS243030-I | 22 11/16 | 26 | 22 |
| CFS243630-I | 22 11/16 | 32 | 25 |
| CFS302430-I | 27 15/16 | 20 | 20 |
| CFS303030-I | 27 15/16 | 26 | 24 |
| CFS303630-I | 27 15/16 | 32 | 29 |
| CFS362430-I | 34 3/8 | 20 | 21 |
| CFS363030-I | 34 3/8 | 26 | 31 |
| CFS363630-I | 34 3/8 | 32 | 33 |
| CFS422430-I | 40 3/8 | 20 | 23 |
| CFS423030-I | 40 3/8 | 26 | 29 |
| CFS423630-I | 40 3/8 | 32 | 34 |
| CFS482430-I | 46 1/16 | 20 | 24 |
| CFS483030-I | 46 1/16 | 26 | 31 |
| CFS483630-I | 46 1/16 | 32 | 36 |
| CFS552430-I | 54 | 20 | 30 |
| CFS553030-I | 54 | 26 | 37 |
| CFS553630-I | 54 | 32 | 45 |
| CFS602430-I | 57 3/4 | 20 | 31 |
| CFS603030-I | 57 3/4 | 26 | 40 |
| CFS603630-I | 57 3/4 | 32 | 47 |
| CFS692430-I | 67 3/4 | 20 | 34 |
| CFS693030-I | 67 3/4 | 26 | 43 |
| CFS693630-I | 67 3/4 | 32 | 52 |
| CFS722430-I | 69 3/8 | 20 | 34 |
| CFS723030-I | 69 3/8 | 26 | 44 |
| CFS723630-I | 69 3/8 | 32 | 53 |
| CFS842430-I | 81 3/8 | 20 | 37 |
| CFS843030-I | 81 3/8 | 26 | 48 |
| CFS843630-I | 81 3/8 | 32 | 59 |

All full-depth intermediate shelves for 30″ consoles with 9″ clearance have a height of 8 1/2″.

## 30" Full-Depth with 3" Clearance

CFS603030B-I

| MODEL # | WIDTH | DEPTH | WEIGHT |
|---|---|---|---|
| CFS242430B-I | 22 11/16 | 20 | 26 |
| CFS243030B-I | 22 11/16 | 26 | 32 |
| CFS243630B-I | 22 11/16 | 32 | 36 |
| CFS302430B-I | 27 15/16 | 20 | 29 |
| CFS303030B-I | 27 15/16 | 26 | 34 |
| CFS303630B-I | 27 15/16 | 32 | 40 |
| CFS362430B-I | 34 3/8 | 20 | 30 |
| CFS363030B-I | 34 3/8 | 26 | 36 |
| CFS363630B-I | 34 3/8 | 32 | 42 |
| CFS422430B-I | 40 3/8 | 20 | 32 |
| CFS423030B-I | 40 3/8 | 26 | 39 |
| CFS423630B-I | 40 3/8 | 32 | 45 |
| CFS482430B-I | 46 1/16 | 20 | 33 |
| CFS483030B-I | 46 1/16 | 26 | 41 |

## 30" Full-Depth with 3" Clearance* (con't.)

| MODEL # | WIDTH | DEPTH | WEIGHT |
|---|---|---|---|
| CFS483630B-I | 46 1/16 | 32 | 47 |
| CFS552430B-I | 54 | 20 | 41 |
| CFS553030B-I | 54 | 26 | 50 |
| CFS553630B-I | 54 | 32 | 59 |
| CFS602430B-I | 57 3/4 | 20 | 42 |
| CFS603030B-I | 57 3/4 | 26 | 52 |
| CFS603630B-I | 57 3/4 | 32 | 62 |
| CFS692430B-I | 67 3/4 | 20 | 45 |
| CFS693030B-I | 67 3/4 | 26 | 55 |
| CFS693630B-I | 67 3/4 | 32 | 66 |
| CFS722430B-I | 69 3/8 | 20 | 45 |
| CFS723030B-I | 69 3/8 | 26 | 56 |
| CFS723630B-I | 69 3/8 | 32 | 67 |
| CFS842430B-I | 81 3/8 | 20 | 48 |
| CFS843030B-I | 81 3/8 | 26 | 62 |
| CFS843630B-I | 81 3/8 | 32 | 74 |

All full-depth intermediate shelves for 30″ consoles with 3″ clearance have a height of 13″.

## 36" Full-Depth with 9" Clearance

CFS603036-I

| MODEL # | WIDTH | DEPTH | WEIGHT |
|---|---|---|---|
| CFS242436-I | 22 11/16 | 20 | 21 |
| CFS243036-I | 22 11/16 | 26 | 26 |
| CFS243636-I | 22 11/16 | 32 | 31 |
| CFS302436-I | 27 15/16 | 20 | 23 |
| CFS303036-I | 27 15/16 | 26 | 29 |
| CFS303636-I | 27 15/16 | 32 | 34 |
| CFS362436-I | 34 3/8 | 20 | 24 |
| CFS363036-I | 34 3/8 | 26 | 31 |
| CFS363636-I | 34 3/8 | 32 | 36 |
| CFS422436-I | 40 3/8 | 20 | 26 |
| CFS423036-I | 40 3/8 | 26 | 33 |
| CFS423636-I | 40 3/8 | 32 | 40 |
| CFS482436-I | 46 1/16 | 20 | 28 |
| CFS483036-I | 46 1/16 | 26 | 35 |
| CFS483636-I | 46 1/16 | 32 | 42 |
| CFS552436-I | 54 | 20 | 35 |
| CFS553036-I | 54 | 26 | 44 |
| CFS553636-I | 54 | 32 | 54 |
| CFS602436-I | 57 3/4 | 20 | 36 |
| CFS603036-I | 57 3/4 | 26 | 46 |
| CFS603636-I | 57 3/4 | 32 | 56 |
| CFS692436-I | 67 3/4 | 20 | 40 |
| CFS693036-I | 67 3/4 | 26 | 50 |
| CFS693636-I | 67 3/4 | 32 | 61 |
| CFS722436-I | 69 3/8 | 20 | 40 |
| CFS723036-I | 69 3/8 | 26 | 51 |
| CFS723636-I | 69 3/8 | 32 | 62 |

## 36" Full-Depth with 9" Clearance (con't.)

| MODEL # | WIDTH | DEPTH | WEIGHT |
|---|---|---|---|
| CFS842436-I | 81 3/8 | 20 | 43 |
| CFS843036-I | 81 3/8 | 26 | 56 |
| CFS843636-I | 81 3/8 | 32 | 68 |

All full-depth intermediate shelves for 36″ consoles with 9″ clearance have a height of 13″.

## 36" Full-Depth with 3" Clearance

CFS362436B-I

| MODEL # | WIDTH | DEPTH | WEIGHT |
|---|---|---|---|
| CFS242436B-I | 22 11/16 | 20 | 23 |
| CFS243036B-I | 22 11/16 | 26 | 38 |
| CFS243636B-I | 22 11/16 | 32 | 31 |
| CFS302436B-I | 27 15/16 | 20 | 25 |
| CFS303036B-I | 27 15/16 | 26 | 30 |
| CFS303636B-I | 27 15/16 | 32 | 34 |
| CFS362436B-I | 34 3/8 | 20 | 26 |
| CFS363036B-I | 34 3/8 | 26 | 32 |
| CFS363636B-I | 34 3/8 | 32 | 36 |
| CFS422436B-I | 40 3/8 | 20 | 29 |
| CFS423036B-I | 40 3/8 | 26 | 34 |
| CFS423636B-I | 40 3/8 | 32 | 40 |
| CFS482436B-I | 46 1/16 | 20 | 30 |
| CFS483036B-I | 46 1/16 | 26 | 35 |
| CFS483636B-I | 46 1/16 | 32 | 42 |
| CFS552436B-I | 54 | 20 | 35 |
| CFS553036B-I | 54 | 26 | 43 |
| CFS553636B-I | 54 | 32 | 51 |
| CFS602436B-I | 57 3/4 | 20 | 36 |
| CFS603036B-I | 57 3/4 | 26 | 45 |
| CFS603636B-I | 57 3/4 | 32 | 53 |
| CFS692436B-I | 67 3/4 | 20 | 40 |
| CFS693036B-I | 67 3/4 | 26 | 48 |
| CFS693636B-I | 67 3/4 | 32 | 57 |
| CFS722436B-I | 69 3/8 | 20 | 40 |
| CFS723036B-I | 69 3/8 | 26 | 50 |
| CFS723636B-I | 69 3/8 | 32 | 58 |
| CFS842436B-I | 81 3/8 | 20 | 43 |
| CFS843036B-I | 81 3/8 | 26 | 54 |
| CFS843636B-I | 81 3/8 | 32 | 65 |

All full-depth intermediate shelves for 36″ consoles with 3″ clearance have a height of 17″.

## Options

| MODIFICATION | MODEL # CHANGE |
|---|---|
| For 42" h consoles | CHSwwdd 42-I |

# Console Accessories

## How to Specify Your Options

**DUMP RIMS**

1. Dump rims can be added to an individual console or around the perimeter of configurations

2. Dump rim model numbers represent the length of the console edge specified

3. Specify side dump rims by adding 'S' to the end of the model number. Specify angled side rims by adding 'AS' to the end of the model number. Side dump rims for consoles with modules are also available.

4. To order 3-sided dump rims around a single console, order the following quantities:

Example: CC603030

| Model # | Quantity |
|---|---|
| DR60 | 1 |
| DR30AS | 2 |
| DRB-L | 2 (to connect dump rims at corners) |

When placing two consoles side-by-side with 3-sided dump rims across the full width of the consoles, order the following quantities:

Example: (2) CC603030

| Model # | Quantity |
|---|---|
| DR60 | 2 |
| DR30AS | 2 |
| DRB-L | 2 |
| DRB-H | 1 (to connect dump rims across the console backs) |

**BRACKETS**

All consoles are shipped with an interior bracket to connect adjacent tables. A Cx-Clip is a decorative exterior bracket option.

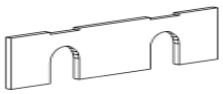

Interior Bracket

Cx-Clip

**WHEELS**

1. Wheels (5″ diameter) are recommended for consoles up to 60″ wide x 36″ deep.

2. When ordering consoles with wheels, add 'W' to the end of the model number to keep the overall height standard. The normal wheel configuration is four swivel wheels.

## Notes

1. A wrapping feature can be added to CS and CC consoles. This includes a paper-holder mounted to the shelf designed to hold up to $25^{13}/_{16}$″ or $31^{13}/_{16}$″ wide rolls, a knife bar mounted to the top and a slot in the left side of the console top. Specify alternative locations if desired.

2. When ordering MRSLOT, specify slot width, depth and location from the edge of the console. MRSLOT-10CONFIG and MRSLOT-13CONFIG pre-assign hole locations for mail slots at 3″ from the console edge, front or rear of console must be specified, console up to 48″ wide come with (2) mail slot grommet inserts, 48″ and wider, (3).

3. CC consoles can be fitted with plunger locks. Order LOCK-M and specify which tables.

4. Special impact-resistant (ABS and stainless steel) surfaces are available. Specify which consoles require the special surface.

5. Fixed, vertical partitions can be specified for CS or CC consoles Specify location, spacing and laminate. Partitions can also be field installed by mounting to aluminum channel.

6. To electrify a console, order a pop-up power center and, if necessary, a grommet (MRCBLCO-3).

7. MRDR16-3-20 and MRML-16-S cannot be mounted under CC consoles. Freestanding pedestals and pedestals with casters can only be mounted under CT, CS or CH consoles.

# Console Accessories

| MODEL # | DESCRIPTION |
|---|---|
| DR24 | For 24″ wide consoles |
| DR30 | For 30″ wide consoles |
| DR36 | For 36″ wide consoles |
| DR42 | For 42″ wide consoles |
| DR48 | For 48″ wide consoles |
| DR55 | For 55″ wide consoles |
| DR60 | For 60″ wide consoles |
| DR69 | For 69″ wide consoles |
| DR72 | For 72″ wide consoles |
| DR84 | For 84″ wide consoles |

## Straight Side Dump Rims

DR24S

| MODEL # | DESCRIPTION |
|---|---|
| DR24S | 24” deep consoles |
| DR30S | 30” deep consoles |
| DR36S | 36” deep consoles |
| DR48S | 48” deep consoles |

## Angled Side Dump Rims

DR24AS

| MODEL # | DESCRIPTION |
|---|---|
| DR24AS | 24″ deep consoles |
| DR30AS | 30″ deep consoles |
| DR36AS | 36″ deep consoles |
| DR48AS | 48″ deep consoles |

## Straight Side Dump Rims for Module Table

DR11S

| MODEL # | DESCRIPTION |
|---|---|
| DR11S | 24″ deep consoles with standard/zip module |
| DR16S | 30″ deep consoles with standard/zip module |
| DR12S | 30″ deep consoles with legal/oversize module |
| DR22S | 36″ deep consoles with standard/zip module |
| DR18S | 36″ deep consoles with legal/oversize module |

## Angled Side Dump Rims for Module Table

DR11AS

| MODEL # | DESCRIPTION |
|---|---|
| DR11AS | 24″ deep consoles with standard/zip module |
| DR16AS | 30″ deep consoles with standard/zip module |
| DR12AS | 30″ deep consoles with legal/oversize module |
| DR22AS | 36″ deep consoles with standard/zip module |
| DR18AS | 36″ deep consoles with legal/oversize module |

## Dump Rim Brackets

DRB-H

| MODEL # | DESCRIPTION |
|---|---|
| DRB-H | H bracket for dump rims |
| DRB-L | L bracket for dump rims |

## Wheels

WHL-50ST

| MODEL # | DESCRIPTION |
|---|---|
| WHL-50ST | 5″ Straight wheel |
| WHL-50S | 5″ Swivel wheel |
| WHL-50SWB | 5″ Swivel wheel with brake |

## Clip

Cx-Clip

| MODEL # | DESCRIPTION |
|---|---|
| Cx-Clip | 2″w console connector |

## Special Features

| MODEL # | DESCRIPTION |
|---|---|
| WRAP30 | Wrapping feature for 30″d console |
| WRAP36 | Wrapping feature for 36″d console |
| MRSLOT | Paper/mail slot - specify size & location |
| MRSLOT-10 | 1.5″x10″ slot w/ plastic grommet - spec. location |
| MRSLOT-13 | 2″x13″ slot w/ plastic grommet - spec. location |
| MRSLOT-10CONFIG* | MRSLOT-10 configuration |
| MRSLOT-13CONFIG* | MRSLOT-13 configuration |
| LOCK-M | Plunger lock for CC consoles |
| ABSwwdd | ABS top (price per square foot) |
| SSTwwdd | Stainless steel top (price per square foot) |

*Slot configurations include two slots on console up to 48″w, three slots on consoles wider than 48″, three slots on. Specify front or back.

## Undertable Vertical Partitions

| MODEL # | DESCRIPTION |
|---|---|
| VLPT2430 | Partition for ww2430 console |
| VLPT2436 | Partition for ww2436 console |
| VLPT3030 | Partition for ww3030 console |
| VLPT3036 | Partition for ww3036 console |
| VLPT3630 | Partition for ww3630 console |
| VLPT3636 | Partition for ww3636 console |
| VLPT2430B | Partition for ww2430B console |
| VLPT2436B | Partition for ww2436B console |
| VLPT3030B | Partition for ww3030B console |
| VLPT3036B | Partition for ww3036B console |
| VLPT3630B | Partition for ww3630B console |
| VLPT3636B | Partition for ww3636B console |

## Cable Management

| MODEL # | DESCRIPTION |
|---|---|
| MRCBLR-36 | Cable raceway for 36″w console |
| MRCBLR-48 | Cable raceway for 48″w console |
| MRCBLR-60 | Cable raceway for 60″w console |
| MRCBLR-72 | Cable raceway for 72″w console |
| MRCBLCO-3 | $3\frac{1}{4}$″ diameter cable cutout - specify location |

## Electrical Options & Undertable Accessories

MRRPC-3

| MODEL # | DESCRIPTION | WEIGHT |
|---|---|---|
| MRMOPS-SP-6 | 6-outlet power strip (12”L) | n/a |
| MRRPC-3 | Retractable power center | n/a |
| MRKDADJ | Adj. keyboard drawer | 15 |
| MRKDADJM | Adj. keyboard drawer with mouse | 16 |

## Undertable Accessories

MRDL16-27

| MODEL # | WIDTH | DEPTH | HEIGHT | WEIGHT |
|---|---|---|---|---|
| Pencil Drawer | | | | |
| MRDR16-3-20 | 20 | $17\frac{1}{8}$ | $2\frac{7}{8}$ | 15 |
| Two-Drawer Suspended Pedestal | | | | |
| MRML16-S | $15\frac{5}{8}$ | $17\frac{13}{16}$ | $18\frac{1}{2}$ | 70 |
| Two-Drawer Pedestal | | | | |
| MRDL16-27 | $15\frac{13}{16}$ | $18\frac{3}{4}$ | 27 | 80 |
| MRDL16-33 | $15\frac{13}{16}$ | $18\frac{3}{4}$ | 33 | 85 |
| Three-Drawer Pedestal | | | | |
| MRTL16-27 | $15\frac{13}{16}$ | $18\frac{3}{4}$ | 27 | 85 |
| MRTL16-33 | $15\frac{13}{16}$ | $18\frac{3}{4}$ | 33 | 90 |
| Two-Drawer Pedestal with Casters | | | | |
| MRML16-C | $15\frac{13}{16}$ | $18\frac{3}{4}$ | $20\frac{1}{2}$ | 80 |
| MRDL16-33-C | $15\frac{13}{16}$ | $18\frac{3}{4}$ | 32 | 89 |
| Three-Drawer Pedestal with Casters | | | | |
| MRTL16-33-C | $15\frac{13}{16}$ | $18\frac{3}{4}$ | 33 | 95 |

## Anti-Fatigue Mats

| MODEL # | WIDTH | DEPTH | THICKNESS |
|---|---|---|---|
| Comfort Eze | | | |
| MR447-2436 | 24 | 36 | $\frac{3}{8}$ |
| MR447-3060 | 30 | 60 | |
| Marble Sof-Tyle | | | |
| MR470-2436 | 24 | 36 | $\frac{1}{2}$ |
| MR470-3660 | 36 | 60 | |

Anti-Fatique Mats reduce stress and fatigue to mail-room personnel and are rated for different uses:

| PRODUCT | USE | WEAR | ANTI-SLIP | ANTI-FATIGUE |
|---|---|---|---|---|
| Comfort Eze | Heavy Duty | Superior | Superior | Superior |
| Sof-Tyle | Heavy Duty | Superior | Fair | Superior |

# Platform

## *How to Specify Your Options*

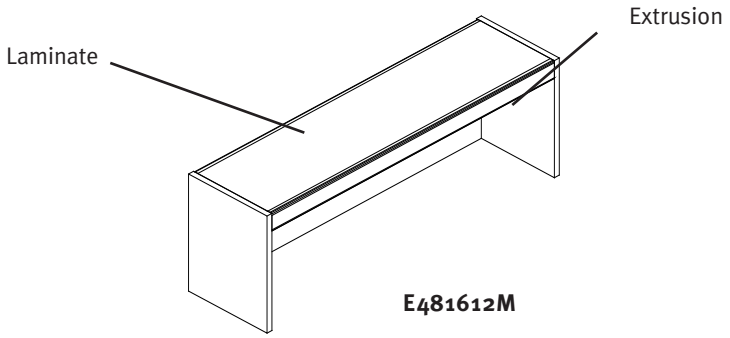


**Extrusion**
x = No Extrustion
M = Aluminum Extrusion

Platform | Depth | Extrusion

**E 4 8 1 6 1 2 M**

Width | Height

Aluminum extrusion required to mount keyboard tray

See page 60 for color codes.

## *Notes*

1. Three-inch high platforms feature a closed front and closed back. They are fastened to the console with a locking cam accessed from outside the platform.

2. Platforms 6″ high and 54″ or wider, with no aluminum extrusion, feature a center support leg.

3. Platforms higher than 6″ are supported with a 2″ fascia across the front.

4. Platform width should equal the width of the console on which it will be used so that it can fasten to the console at both ends.

5. Platforms 12″ or higher may be ordered with front and back aluminum extrusions by adding ‘M’ to the end of the model number. Twelve inch platforms feature a 5″ back panel and the 18″ h platforms a 8″h back panel. Both have an open area between the back panel and the extrusion for cable management.

6. A keyboard tray may be mounted on the aluminum extrusion platform and positioned anywhere along the width of the extrusion. Keyboards cannot be mounted on platforms without extrusions. Keyboards must be ordered separately (See page 48 and 51).

7. Platforms without aluminum extrusions have full backs with a 1 3/16″ black, cable-management gasket located at the bottom of the back panel.

8. Platforms are shipped knocked down. When getting freight quotes specify Class 85. If dimensions are required, use 6″ for the height and add 3″ to the width and depth for packing materials.

9. Modifications may be made to the width, depth and height

# *Platforms*

## 3" High Platforms



E361203

| MODEL # | WIDTH | DEPTH | WEIGHT |
|---|---|---|---|
| E241203 | 24 3/4 | 12 7/8 | 15 |
| E241603 | 24 3/4 | 16 7/8 | 19 |
| E281203 | 28 3/4 | 12 7/8 | 16 |
| E281603 | 28 3/4 | 16 7/8 | 20 |
| E301203 | 30 | 12 7/8 | 20 |
| E301603 | 30 | 16 7/8 | 23 |
| E361203 | 36 7/16 | 12 7/8 | 23 |
| E361603 | 36 7/16 | 16 7/8 | 23 |
| E421203 | 42 7/16 | 12 7/8 | 24 |
| E421603 | 42 7/16 | 16 7/8 | 25 |
| E481203 | 48 1/8 | 12 7/8 | 23 |
| E481603 | 48 1/8 | 16 7/8 | 28 |
| E551203 | 56 1/8 | 12 7/8 | 28 |
| E551603 | 56 1/8 | 16 7/8 | 32 |
| E601203 | 59 13/16 | 12 7/8 | 29 |
| E601603 | 59 13/16 | 16 7/8 | 34 |
| E691203 | 69 13/16 | 12 7/8 | 31 |
| E691603 | 69 13/16 | 16 7/8 | 37 |
| E721203 | 71 1/2 | 12 7/8 | 32 |
| E721603 | 71 1/2 | 16 7/8 | 39 |
| E841203 | 83 1/2 | 12 7/8 | 36 |
| E841603 | 83 1/2 | 16 7/8 | 43 |

## 6" High Platforms

E361206

| MODEL # | WIDTH | DEPTH | WEIGHT |
|---|---|---|---|
| E241206 | 24 3/4 | 12 7/8 | 15 |
| E241606 | 24 3/4 | 16 7/8 | 19 |
| E281206 | 28 3/4 | 12 7/8 | 16 |
| E281606 | 28 3/4 | 16 7/8 | 20 |
| E301206 | 30 | 12 7/8 | 20 |
| E301606 | 30 | 16 7/8 | 23 |
| E361206 | 36 7/16 | 12 7/8 | 23 |
| E361606 | 36 7/16 | 16 7/8 | 23 |
| E421206 | 42 7/16 | 12 7/8 | 24 |
| E421606 | 42 7/16 | 16 7/8 | 25 |
| E481206 | 48 1/8 | 12 7/8 | 23 |
| E481606 | 48 1/8 | 16 7/8 | 28 |
| E551206 | 56 1/8 | 12 7/8 | 28 |
| E551606 | 56 1/8 | 16 7/8 | 32 |
| E601206 | 59 13/16 | 12 7/8 | 29 |
| E601606 | 59 13/16 | 16 7/8 | 34 |
| E691206 | 69 13/16 | 12 7/8 | 31 |
| E691606 | 69 13/16 | 16 7/8 | 37 |
| E721206 | 71 1/2 | 12 7/8 | 32 |
| E721606 | 71 1/2 | 16 7/8 | 39 |
| E841206 | 83 1/2 | 12 7/8 | 36 |
| E841606 | 83 1/2 | 16 7/8 | 43 |

## Options

| MODIFICATION | MODEL # CHANGE |
|---|---|
| Drill top for wire dividers | EwwddhhD |

Aluminum extrusion option not available on 3″ and 6″ high platforms.

## 12" High Platforms

E301612

| MODEL # | WIDTH | DEPTH | WEIGHT |
|---|---|---|---|
| E241212 | 24 3/4 | 12 7/8 | 22 |
| E241612 | 24 3/4 | 16 7/8 | 25 |
| E281212 | 28 3/4 | 12 7/8 | 25 |
| E281612 | 28 3/4 | 16 7/8 | 28 |
| E301212 | 30 | 12 7/8 | 26 |
| E301612 | 30 | 16 7/8 | 31 |
| E361212 | 36 7/16 | 12 7/8 | 26 |
| E361612 | 36 7/16 | 16 7/8 | 31 |
| E421212 | 42 7/16 | 12 7/8 | 33 |
| E421612 | 42 7/16 | 16 7/8 | 33 |
| E481212 | 48 1/8 | 12 7/8 | 31 |
| E481612 | 48 1/8 | 16 7/8 | 36 |
| E551212 | 56 1/8 | 12 7/8 | 44 |
| E551612 | 56 1/8 | 16 7/8 | 44 |
| E601212 | 59 13/16 | 12 7/8 | 40 |
| E601612 | 59 13/16 | 16 7/8 | 46 |
| E691212 | 69 13/16 | 12 7/8 | 45 |
| E691612 | 69 13/16 | 16 7/8 | 51 |
| E721212 | 71 1/2 | 12 7/8 | 44 |
| E721612 | 71 1/2 | 16 7/8 | 53 |
| E841212 | 83 1/2 | 12 7/8 | 50 |
| E841612 | 83 1/2 | 16 7/8 | 58 |

## 18" High Platforms

E361618

| MODEL # | WIDTH | DEPTH | WEIGHT |
|---|---|---|---|
| E241218 | 24 3/4 | 12 7/8 | 28 |
| E241618 | 24 3/4 | 16 7/8 | 32 |
| E281218 | 28 3/4 | 12 7/8 | 31 |
| E281618 | 28 3/4 | 16 7/8 | 34 |
| E301218 | 30 | 12 7/8 | 33 |
| E301618 | 30 | 16 7/8 | 39 |
| E361218 | 36 7/16 | 12 7/8 | 33 |
| E361618 | 36 7/16 | 16 7/8 | 39 |
| E421218 | 42 7/16 | 12 7/8 | 42 |
| E421618 | 42 7/16 | 16 7/8 | 42 |
| E481218 | 48 1/8 | 12 7/8 | 39 |
| E481618 | 48 1/8 | 16 7/8 | 45 |
| E551218 | 56 1/8 | 12 7/8 | 57 |
| E551618 | 56 1/8 | 16 7/8 | 57 |
| E601218 | 59 13/16 | 12 7/8 | 51 |
| E601618 | 59 13/16 | 16 7/8 | 58 |
| E691218 | 69 13/16 | 12 7/8 | 56 |

## 18" High Platforms (con't.)

| MODEL # | WIDTH | DEPTH | WEIGHT |
|---|---|---|---|
| E691618 | 69 13/16 | 16 7/8 | 64 |
| E721218 | 71 1/2 | 12 7/8 | 56 |
| E721618 | 71 1/2 | 16 7/8 | 66 |
| E841218 | 83 1/2 | 12 7/8 | 63 |
| E841618 | 83 1/2 | 16 7/8 | 74 |

## Options

| MODIFICATION | MODEL # CHANGE |
|---|---|
| Aluminum extrusion platform | EwwddhhM |
| Drill top for wire dividers | EwwddhhD |

Aluminum extrusion option adds 3/4" to the overall depth of the platform.

## 24" High Platforms

E351224

| MODEL # | WIDTH | DEPTH | WEIGHT |
|---|---|---|---|
| E241224 | 24 3/4 | 12 7/8 | 33 |
| E241624 | 24 3/4 | 16 7/8 | 39 |
| E281224 | 28 3/4 | 12 7/8 | 38 |
| E281624 | 28 3/4 | 16 7/8 | 41 |
| E301224 | 30 | 12 7/8 | 40 |
| E301624 | 30 | 16 7/8 | 46 |
| E361224 | 36 7/16 | 12 7/8 | 43 |
| E361624 | 36 7/16 | 16 7/8 | 48 |
| E421224 | 42 7/16 | 12 7/8 | 45 |
| E421624 | 42 7/16 | 16 7/8 | 52 |
| E481224 | 48 1/8 | 12 7/8 | 46 |
| E481624 | 48 1/8 | 16 7/8 | 54 |
| E551224 | 56 1/8 | 12 7/8 | 70 |
| E551624 | 56 1/8 | 16 7/8 | 70 |
| E601224 | 59 13/16 | 12 7/8 | 62 |
| E601624 | 59 13/16 | 16 7/8 | 70 |
| E691224 | 69 13/16 | 12 7/8 | 68 |
| E691624 | 69 13/16 | 16 7/8 | 77 |
| E721224 | 71 1/2 | 12 7/8 | 68 |
| E721624 | 71 1/2 | 16 7/8 | 79 |
| E841224 | 83 1/2 | 12 7/8 | 76 |
| E841624 | 83 1/2 | 16 7/8 | 89 |

## Options

| MODIFICATION | MODEL # CHANGE |
|---|---|
| Aluminum extrusion platform | EwwddhhM |
| Drill top for wire dividers | EwwddhhD |

Aluminum extrusion option adds 3/4" to the overall depth of the platform.

## Platform Accessories

MRUSTL-24

| MODEL # | DESCRIPTION | WEIGHT |
|---|---|---|
| MRKDADJ | Adj. keyboard drawer | 15 |
| MRKDADJM | Adj. keyboard drawer with mouse | 16 |
| MRUSTL-24 | 18" black undersurface task light | 10 |
| MRTBwwhh | Tackboard (per sq. foot) | n/a |

# Executive Series Consoles

## *How to Specify Your Options*

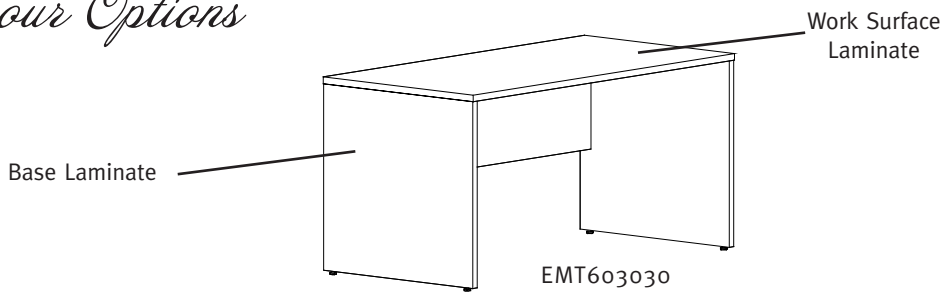


**EXECUTIVE CONSOLE**

**Legs**

| Model | Description |
|---|---|
| HR | Half right leg |
| HL | Half left leg |
| HLHR | Half left/half right |

Executive Series | Width | Height | Legs

**E M T 3 6 2 4 3 0 F H R**

**Shelf**
T = Table without Shelf
S = Table with Shelf

Depth

Modesty Panel

**Modesty Panel**

| Model | Description |
|---|---|
| x | Standard Modesty |
| F | Full Modesty |

**EXECUTIVE CONSOLE WITH SHELF**

**Locks**

| Model | Description |
|---|---|
| x | No locks |
| Y | Locks |

Executive Series | Width | Height | Locks

**E M S 3 6 2 4 3 0 S Y F C**

**Shelf**
T = Table without Shelf
S = Table with Shelf

Depth

Sliding Doors

Handle Options

**Sliding Doors**

| Model | Description |
|---|---|
| x | No doors |
| S | Sliding doors |

**Handle Options†**

| Model | Description |
|---|---|
| EL | Elliptical Black |
| ES | Elliptical Silver |
| CB | Crescent Black |
| CS | Crescent Silver |
| TC | Textured Crescent |
| FC | Flared Crescent |
| WP | Wired Pull (MR zinc) |
| SP | Special Handle |

†Recessed and bar not available on all units.

See page 60 for color codes.

# Executive Series Consoles (con't.)

**EXECUTIVE OVERHEAD**

**Clearance**
18 = 18" Clearance
24 = 24" Clearance

Overhead | Width | Handle Options

**M O H D 6 0 N B 1 8 Y E L**

Door Options | **Back** NB = No Back CB = Closed Back | Locks

**Doors**

| Model | Description |
|---|---|
| HD | Hinged Doors |
| RD | Retractable |
| ND | None |

**Locks**

| Model | Description |
|---|---|
| Blank | No locks |
| Y | Locks |

**Handle Options†**

| Model | Description |
|---|---|
| EL | Elliptical Black |
| ES | Elliptical Silver |
| CB | Crescent Black |
| CS | Crescent Silver |
| TC | Textured Crescent |
| FC | Flared Crescent |
| WP | Wired Pull (MR zinc) |
| SP | Special Handle |

†Recessed and bar not available on all units.

## Console Notes

1. Executive Consoles are light-use equipment with no aluminum extrusions and are not intended for general mail center use.

2. The standard modesty panel in an EMT Console is 15 3/4"h. A full modesty panel can be ordered by adding 'F' to the end of the model number.

3. When using modules on EMT Consoles, use a full modesty panel for extra support.

4. EMS Consoles feature a full-depth shelf located 3" above the floo . Clearance between the shelf and worksurface is 24".

5. Grommets are not standard in Executive Mail Consoles. Order MRCBLCO-3 and specify a grommet location.

6. Counter Consoles include a 30"d, 29 1/2"h workstations and a 16"d counter surface with a radius edge.

7. Credenzas feature one set of doors on units up to 48" wide and two sets of doors on wider units.

8. Credenza doors come standard with handles.

9. Credenzas also feature a recessed 3" kickplate and one adjustable shelf per section.

10.Executive Consoles are shipped knocked down. Specify Class 85 when obtaining freight quotes. If dimensions are required, use 10" for the height and add 3" to the depth and width of the table for packing materials.

11.Modifications to EM and EMS consoles may be made to the width, depth, height, and the position of the modesty panel.

## Overhead Notes

1. All overhead units 42" and wider have two sections. 36" units have one section.

2. Overhead units feature 18" clearance between the worksurface and the bottom fascia.

3. Overhead Storage Cabinets have hinged doors and 26" clearance between the shelves (20" if optional 24" clearance is specified) One adjustable shelf per section is included.

4. Overhead Storage Units are drilled every 2 1/2" for wire dividers. Units include 18-36 dividers, based on the width of the unit.

5. Overhead Storage Units feature a 1 3/16" black cable management gasket positioned at the bottom of the back panel.

6. Clearance between shelves is 12" on Overhead Storage Units with Retractable Doors, 14" without doors.

7. Usable depth of bottom shelf on Overhead Storage Units with Retractable Doors is 12 7/8".

8. Optional open-back units are open only below bottom shelf.

9. Task lights and tackboards can be installed in lower area of overhead units.

10.All overhead units are shipped fully assembled. Use Class 100 when obtaining freight quotes. If dimensions are required, add 3" to each dimension for packing materials.

# Executive Series Consoles

## 24" Deep Space Saver without Shelf

EMT302430

| MODEL # | WIDTH | HEIGHT | WEIGHT |
|---|---|---|---|
| EMT242430 | 24 3/4 | 29 1/2 | 76 |
| EMT282430 | 28 3/4 | 29 1/2 | 89 |
| EMT302430 | 30 | 29 1/2 | 90 |
| EMT362430 | 36 7/16 | 29 1/2 | 105 |
| EMT422430 | 42 7/16 | 29 1/2 | 114 |
| EMT482430 | 48 1/8 | 29 1/2 | 123 |
| EMT552430 | 56 1/8 | 29 1/2 | 137 |
| EMT602430 | 59 13/16 | 29 1/2 | 141 |
| EMT692430 | 69 13/16 | 29 1/2 | 155 |
| EMT722430 | 71 1/2 | 29 1/2 | 159 |

## 30" Deep Space Saver without Shelf

EMT303030

| MODEL # | WIDTH | HEIGHT | WEIGHT |
|---|---|---|---|
| EMT243030 | 24 3/4 | 29 1/2 | 88 |
| EMT283030 | 28 3/4 | 29 1/2 | 92 |
| EMT303030 | 30 | 29 1/2 | 96 |
| EMT363030 | 36 7/16 | 29 1/2 | 92 |
| EMT423030 | 42 7/16 | 29 1/2 | 100 |
| EMT483030 | 48 1/8 | 29 1/2 | 107 |
| EMT553030 | 56 1/8 | 29 1/2 | 119 |
| EMT603030 | 59 13/16 | 29 1/2 | 123 |
| EMT693030 | 69 13/16 | 29 1/2 | 135 |
| EMT723030 | 71 1/2 | 29 1/2 | 142 |

## Options

| MODIFICATION | MODEL # CHANGE |
|---|---|
| Full modesty panel | EMTwwdd30F |
| Half right leg | EMTwwdd30Hr |
| Half left leg | EMTwwdd30Hl |
| Both half legs | EMTwwdd30Hl Hr |

## 24" Deep Space Saver with Shelf

EMS302430

| MODEL # | WIDTH | HEIGHT | WEIGHT |
|---|---|---|---|
| EMS362430 | 36 7/16 | 29 1/2 | 123 |
| EMS422430 | 42 7/16 | 29 1/2 | 135 |
| EMS482430 | 48 1/8 | 29 1/2 | 145 |
| EMS552430 | 56 1/8 | 29 1/2 | 157 |
| EMS602430 | 59 13/16 | 29 1/2 | 169 |
| EMS692430 | 69 13/16 | 29 1/2 | 187 |
| EMS722430 | 71 1/2 | 29 1/2 | 189 |

## 30" Deep Space Saver with Shelf

EMS423030

| MODEL # | WIDTH | HEIGHT | WEIGHT |
|---|---|---|---|
| EMS363030 | 36 7/16 | 29 1/2 | 142 |
| EMS423030 | 42 7/16 | 29 1/2 | 156 |
| EMS483030 | 48 1/8 | 29 1/2 | 169 |

## 30" Deep Space Saver with Shelf (con't.)

| MODEL # | WIDTH | HEIGHT | WEIGHT |
|---|---|---|---|
| EMS553030 | 56 1/8 | 29 1/2 | 183 |
| EMS603030 | 59 13/16 | 29 1/2 | 196 |
| EMS663030 | 69 13/16 | 29 1/2 | 217 |
| EMS723030 | 71 1/2 | 29 1/2 | 219 |

## Options

| MODIFICATION | MODEL # CHANGE |
|---|---|
| Sliding doors | EMSwwdd30S |

## Corner Consoles



EMT4242FHcF

| MODEL # | WIDTH | DEPTHT | HEIGHT | WEIGHT |
|---|---|---|---|---|
| For use with 24"d returns | | | | |
| EMT4242FHcF | 42 | 42 | 29 1/2 | 140 |
| For use with 30"d returns | | | | |
| EMT4848FHcF | 48 | 48 | 29 1/2 | 160 |

For returns, order Executive console with half-legs.

## Counter Consoles

EC483042

| MODEL # | WIDTH | DEPTHT | HEIGHT | WEIGHT |
|---|---|---|---|---|
| EC483042 | 48 | 30 | 42 | 206 |
| EC603042 | 60 | 30 | 42 | 231 |
| EC723042 | 72 | 30 | 42 | 321 |

## 24" Deep Space Saver Credenza

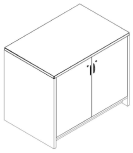

EMC362430

| MODEL # | WIDTH | HEIGHT | WEIGHT |
|---|---|---|---|
| EMC362430 | 36 7/16 | 29 1/2 | 184 |
| EMC422430 | 42 7/16 | 29 1/2 | 200 |
| EMC482430 | 48 1/8 | 29 1/2 | 214 |
| EMC552430 | 56 1/8 | 29 1/2 | 238 |
| EMC602430 | 59 13/16 | 29 1/2 | 246 |
| EMC692430 | 69 13/16 | 29 1/2 | 270 |
| EMC722430 | 71 1/2 | 29 1/2 | 280 |

Add 'Sl' to the end of the model number for pre-drilled mail slots at no upcharge. Contact HAMILTON for modification charges for EMC consoles

## 30" Deep Space Saver Credenza

EMC363030

| MODEL # | WIDTH | HEIGHT | WEIGHT |
|---|---|---|---|
| EMC363030 | 36 7/16 | 29 1/2 | 210 |
| EMC423030 | 42 7/16 | 29 1/2 | 228 |
| EMC483030 | 48 1/8 | 29 1/2 | 246 |
| EMC553030 | 56 1/8 | 29 1/2 | 274 |
| EMC603030 | 59 13/16 | 29 1/2 | 282 |
| EMC693030 | 69 13/16 | 29 1/2 | 310 |
| EMC723030 | 71 1/2 | 29 1/2 | 320 |

Add 'Sl' to the end of the model number for pre-drilled mail slots at no upcharge. contact HAMILTON for modification charges for EMC consoles

## Overhead Storage Units with Hinged Doors

MOHD42-18

| MODEL # | WIDTH | DEPTH | WEIGHT |
|---|---|---|---|
| MOHD36-18 | 36 7/16 | 16 | 150 |
| MOHD42-18 | 42 7/16 | 16 | 175 |
| MOHD48-18 | 48 1/8 | 16 | 180 |
| MOHD55-18 | 56 1/8 | 16 | 185 |
| MOHD60-18 | 59 13/16 | 16 | 190 |
| MOHD69-18 | 69 13/16 | 16 | 195 |
| MOHD72-18 | 71 1/2 | 16 | 200 |

All overhead storage units with hinged doors are 48″ high.

## Options

| MODIFICATION | MODEL # CHANGE |
|---|---|
| 24″ clearance | MOHDww-24 |

## Overhead Storage Units with no Doors

MOND42CB

| MODEL # | WIDTH | DEPTH | WEIGHT |
|---|---|---|---|
| MOND36CB | 36 7/16 | 15 | 100 |
| MOND42CB | 42 7/16 | 15 | 110 |
| MOND48CB | 48 1/8 | 15 | 120 |
| MOND55CB | 56 1/8 | 15 | 135 |
| MOND60CB | 59 13/16 | 15 | 140 |
| MOND69CB | 69 13/16 | 15 | 155 |
| MOND72CB | 71 1/2 | 15 | 160 |

All overhead storage units with no doors are 36″ high.

## Overhead Storage Units w/ Retractable Doors

MORD42CB

| MODEL # | WIDTH | DEPTH | WEIGHT |
|---|---|---|---|
| MORD36CB | 36 7/16 | 15 | 120 |
| MORD42CB | 42 7/16 | 15 | 131 |
| MORD48CB | 48 1/8 | 15 | 142 |
| MORD55CB | 56 1/8 | 15 | 159 |
| MORD60CB | 59 13/16 | 15 | 165 |
| MORD69CB | 69 13/16 | 15 | 182 |
| MORD72CB | 71 1/2 | 15 | 187 |

All overhead storage units with retractable doors are 36″ high.

## Options

| MODIFICATION | MODEL # CHANGE |
|---|---|
| No lower back | MOx DwwNB |

## Accessories

MCRSVD

| MODEL # | DESCRIPTION |
|---|---|
| MRUSTL-24 | 18” black undersurface task light |
| MRUSTLARM | Swivel-arm task light |
| MRTBwwhh | Tackboard (per square foot) |
| MRSVD | 12 Wire dividers |

## Two-Drawer Lateral Files

MRLF

| MODEL # | WIDTH | HEIGHT | WEIGHT |
|---|---|---|---|
| MRLF262028 | 25 5/8 | 28 | 150 |
| MRLF262030 | 25 5/8 | 29 1/2 | 154 |
| MRLF362028 | 36 1/8 | 28 | 171 |
| MRLF362030 | 36 1/8 | 29 1/2 | 175 |

All lateral files have a depth of 20″.

## Three-Drawer Lateral Files

MRLF

| MODEL # | WIDTH | HEIGHT | WEIGHT |
|---|---|---|---|
| MRLF262043 | 25 1/2 | 42 1/2 | 190 |
| MRLF362043 | 36 | 42 1/2 | 200 |

All lateral files have a depth of 20″.

## Four-Drawer Lateral Files

MRLF

| MODEL # | WIDTH | HEIGHT | WEIGHT |
|---|---|---|---|
| MRLF262060 | 25 1/2 | 61 1/2 | 234 |
| MRLF362060 | 36 | 61 1/2 | 261 |

All lateral files have a depth of 20″.

## Personal Files

MLFMP

| MODEL # | WIDTH | HEIGHT | WEIGHT |
|---|---|---|---|
| MLFMP282028L | 28 11/16 | 28 | 210 |
| MLFMP282028R | 28 11/16 | 28 | 210 |

All lateral files ha e a depth of 18 1/2″.

## Undertable Accessories

MRDL16-27

MRTL16-29

| MODEL # | WIDTH | DEPTH | HEIGHT | WEIGHT |
|---|---|---|---|---|
| Pencil Drawer | | | | |
| MRDR16-3-20 | 20 | 17 1/8 | 2 7/8 | 15 |
| Two-Drawer Suspended Pedestal | | | | |
| MRML16-S | 15 9/16 | 17 13/16 | 18 1/2 | 70 |
| Two-Drawer Pedestal | | | | |
| MRDL16-29 | 15 13/16 | 18 3/4 | 28 | 90 |
| Three-Drawer Pedestal | | | | |
| MRTL16-29 | 15 13/16 | 18 3/4 | 28 | 85 |
| Two-Drawer Pedestal with Casters | | | | |
| MRDL16-29-C | 15 13/16 | 18 3/4 | 28 | 85 |
| Three-Drawer Pedestal with Casters | | | | |
| MRTL16-29-C | 15 13/16 | 18 3/4 | 28 | 90 |

## Bookcases

MBC

| MODEL # | WIDTH | HEIGHT | SHELVES | WEIGHT |
|---|---|---|---|---|
| MBC301830 | 30 | 30 | 1 | 94 |
| MBC361830 | 36 | 30 | 1 | 108 |
| MBC301836 | 30 | 36 | 2 | 105 |
| MBC361836 | 36 | 36 | 2 | 121 |
| MBC301842 | 30 | 42 | 2 | 127 |
| MBC361842 | 36 | 42 | 2 | 146 |
| MBC301860 | 30 | 60 | 3 | 148 |
| MBC361860 | 36 | 60 | 3 | 171 |
| MBC301872 | 30 | 72 | 4 | 181 |
| MBC361872 | 36 | 72 | 4 | 208 |

All bookcases have a depth of 18. Shelves are 16″ deep to accommodate binder and printout storage.

# Executive Series Mail Stations

## How to Specify Your Options

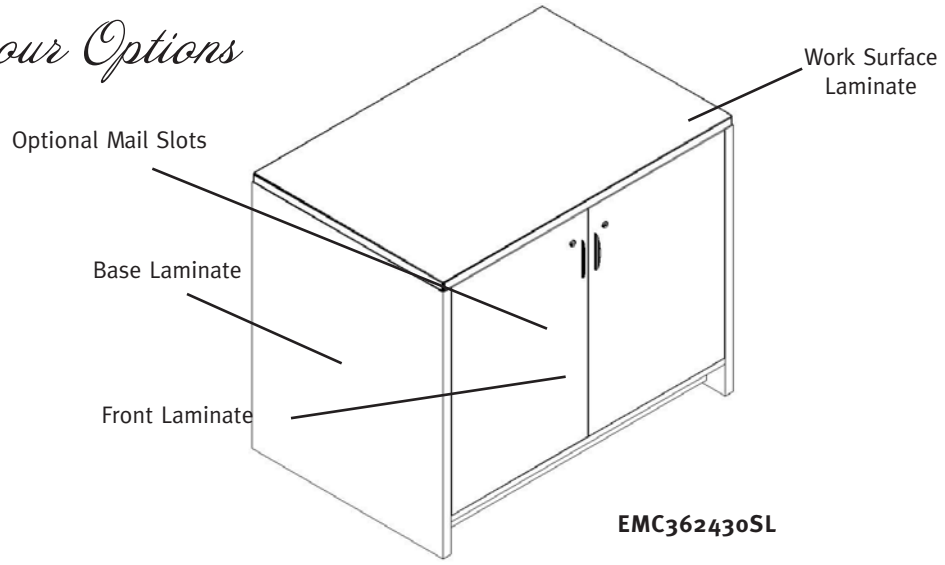


**EXECUTIVE CREDENZA**

| Locks | |
|---|---|
| **Model** | **Description** |
| Blank | No locks |
| Y | Locks |

Executive Series | Width | Height | Locks

**E M C 3 6 2 4 3 0 S Y E L**

**Credenza** | Depth | Mail Slots | Handle Options

| Handle Options† | |
|---|---|
| **Model** | **Description** |
| EL | Elliptical Black |
| ES | Elliptical Silver |
| CB | Crescent Black |
| CS | Crescent Silver |
| TC | Textured Crescent |
| FC | Flared Crescent |
| WP | Wired Pull (MR zinc) |
| SP | Special Handle |

†Recessed and bar not available on all units.

See page 60 for color codes.

## Notes

1. Executive Mail Stations are light-use equipment with no aluminum extrusions and are not intended for general mail center use.

2. Modules attach to consoles with double-faced adhesive tape.

3. Consoles feature one set of doors on units up to 48″ wide and two sets of doors on wider units.

4. Consoles doors come standard with black handles and a 1½″ x 10″ mail slot.

5. Consoles also features a recessed 3″ kickplate and one adjustable shelf per section.

6. Executive Mail Station consoles are shipped assembled. Specify Class 100 when obtaining freight quotes. If dimensions are required, use 10″ for the height and add 3″ to the depth and width of the console for packing materials. See page 5 for module freight quote information.

# Executive Mail Stations

## 24” Deep Space Saver Credenza

EMC362430

| MODEL # | WIDTH | HEIGHT | WEIGHT |
|---|---|---|---|
| EMC362430SL | 36 7/16 | 29 1/2 | 184 |
| EMC422430SL | 42 7/16 | 29 1/2 | 200 |
| EMC482430SL | 48 1/8 | 29 1/2 | 214 |
| EMC552430SL | 56 1/8 | 29 1/2 | 238 |
| EMC602430SL | 59 13/16 | 29 1/2 | 246 |
| EMC692430SL | 69 13/16 | 29 1/2 | 270 |
| EMC722430SL | 71 1/2 | 29 1/2 | 280 |

## 30” Deep Space Saver Credenza

EMC363630SL

| MODEL # | WIDTH | HEIGHT | WEIGHT |
|---|---|---|---|
| EMC363030SL | 36 7/16 | 29 1/2 | 210 |
| EMC423030SL | 42 7/16 | 29 1/2 | 228 |
| EMC483030SL | 48 1/8 | 29 1/2 | 246 |
| EMC553030SL | 56 1/8 | 29 1/2 | 274 |
| EMC603030SL | 59 13/16 | 29 1/2 | 282 |
| EMC693030SL | 69 13/16 | 29 1/2 | 310 |
| EMC723030SL | 71 1/2 | 29 1/2 | 320 |

SL, mail slot option, is a non-contract option available at no additional charge. Price reflects console with mail slot only.

## Cable Management

MRCBLR

| MODEL # | DESCRIPTION |
|---|---|
| MRCBLR-36 | Cable raceway for 36”w console |
| MRCBLR-48 | Cable raceway for 48”w console |
| MRCBLR-60 | Cable raceway for 60”w console |
| MRCBLR-72 | Cable raceway for 72”w console |
| MRCBLCO-3 | 3 1/4 diameter cable cutout |

## Electrical Options

MRRPC-3

| MODEL # | DESCRIPTION |
|---|---|
| MRMOPS-SP-6 | 6-outlet power strip 12” |
| MRRPC-3 | Retractable power center |

# Carts

## Platform Cart*

UC3725P

| MODEL # | WIDTH | DEPTH | HEIGHT | WEIGHT |
|---|---|---|---|---|
| UC3725P | 37 | 25 | 36-42 | 75 |

Cart includes cart frame, adjustable padded handle, lower platform with scuff-resistant bumper, two straight and two swivel wheels.

## Delivery Cart*

UC3725D

| MODEL # | WIDTH | DEPTH | HEIGHT | WEIGHT |
|---|---|---|---|---|
| UC3725D | 37 | 25 | 36-42 | 85 |

Cart includes cart frame, adjustable padded handle, lower platform with scuff-resistant bumper, two straight and two swivel wheels, adjustable bracket, small parcel and small mail baskets.

## Master Cart*

UC3725M

| MODEL # | WIDTH | DEPTH | HEIGHT | WEIGHT |
|---|---|---|---|---|
| UC3725M | 37 | 25 | 36-42 | 90 |

Cart includes cart frame, adjustable padded handle, lower platform with scuff-resistant bumper, two straight and two swivel wheels, adjustable bracket, large parcel and large mail baskets.

## Executive Cart*

UC3825E

| MODEL # | WIDTH | DEPTH | HEIGHT | WEIGHT |
|---|---|---|---|---|
| UC3725E | 37 | 25 | 36-42 | 100 |

Cart includes cart frame, adjustable padded handle, lower and upper platform with scuff-resistant bumper, two straight and two swivel wheels, adjustable bracket, small parcel and small mail baskets with writing surface and mailbag grips.

## Cart Accessories

UC172507PB

| MODEL # | WIDTH | DEPTH | HEIGHT | WEIGHT |
|---|---|---|---|---|
| Small Parcel Basket | | | | |
| UC172507PB | 17 | 25 | 7 | 9 |
| Small Mail Basket | | | | |
| UC172511MB | 17 | 25 | 11 | 10 |
| Large Parcel Basket | | | | |
| UC173607PB | 17 | 36 | 7 | 10 |
| Large Mail Basket | | | | |
| UC173611MB | 17 | 36 | 11 | 11 |
| Writing Platform | | | | |
| UC2208WP | 21 3/4 | 8 | | 10 |
| Upper Platform | | | | |
| UC2821UP | 28 | 21 | | 20 |
| Mailbag Grips (Set of Two) | | | | |
| UCMG | | | | 5 |
| Adjustable Bracket | | | | |
| UCADJB | | | | 8 |

*The Universal Cart provides flexibility in configuring components to customer's mail distribution needs. The cart frame is one piece welded construction, powder-coated on two 8″ wheels and two 5″ swivel casters. Wheels and casters are non-marking rubber inset to eliminate scuffing of walls and furniture. The base unit is a single-tier platform cart to which additional platforms, mail and parcel baskets and accessories may be added. The base unit has a padded, height-adjustable handle (36″ to 42″ in 2″ increments). Platforms are edged in scuff-resistant bumper molding.

Upper platforms, mail and parcel basket assemblies are adjustable on 2″ centers. The 8″ x 21 3/4″ writing surface snaps to handle. Rubber-insulated mailbag grips attach to handle.

Mail baskets are 11″h x 17″w and are available in 25″ or 36″ depths.

Parcel baskets are 7 1/4″h x 17″w and are available in 25″ or 36″ depths.

# Standard Laminate Colors

| | Color Number | Work Surface | Base and Verticals | Edge Banding | Thermofoil | Brand Name and Number |
|---|---|---|---|---|---|---|
| Antique White | 013 | ● | ● | ● | ● | Wilsonart 1572-60 |
| Black | 007 | ● | ● | ● | ● | Wilsonart 1595-60 |
| Cafelle | 099 | ● | ● | ● | ● | Wilsonart 7933T-07 |
| Canyon Zephyr | 093 | ● | ● | ● | | Wilsonart 4842-60 |
| Cognac | 091 | ● | ● | ● | ● | Nevamar Dynea 4511 |
| Colombian Walnut | 102 | ● | ● | ● | | Wilsonart 7943 K |
| Desert Zephyr | 095 | ● | | | | Wilsonart 4841-60 |
| Designer White | 082 | ● | ● | ● | ● | Wilsonart D354-60 |
| Dove Grey | 002 | ● | ● | ● | | Wilsonart D92-60 |
| Empire Mahogany | 078 | ● | ● | ● | | Wilsonart 7122T-60 |
| Fashion Grey | 035 | ● | ● | ● | ● | Wilsonart D381-60 |
| Frosty White | 071 | ● | ● | ● | ● | Wilsonart 1573-60 |
| Graphite Nebula | 030 | ● | ● | ● | | Wilsonart 4623-60 |
| Grey Moss | 090 | ● | ● | ● | | Wilsonart 15008 |
| Ingot Grey | 006 | ● | ● | ● | | Pionite SG211-S |
| Kensington Maple | 036 | ● | ● | ● | ● | Wilsonart 10776-60 |
| Misted Zephyr | 094 | ● | | | | Wilsonart 4843-60 |
| Monticello Maple | 101 | ● | ● | ● | | Wilsonart 7925 |
| Natural Almond | 031 | ● | ● | ● | ● | Wilsonart D30-60 |
| Oiled Cherry | 055 | ● | ● | ● | | Pionite WC421-S |
| Shadow | 096 | ● | ● | ● | | Wilsonart D96-60 |
| Shaker Cherry | 097 | ● | ● | ● | ● | Wilsonart 7935-7 |
| Slate Grey | 068 | ● | ● | ● | | Wilsonart D91-60 |
| Solar Oak | 089 | ● | ● | ● | ● | Wilsonart 7816-60 |
| Twilight Zephyr | 092 | ● | | | | Wilsonart 4845-60 |
| White Nebula | 086 | ● | | | | Wilsonart 4621-60 |
| Windsor Mahogany | 001 | ● | ● | ● | | Wilsonart 7039-60 |
| Woodlawn Cherry | 003 | ● | ● | ● | ● | Uniboard 965 |

## Green Initiatives

Hamilton Casework Solutions offer GREENGUARD Gold certified products to provide safe, quality, environmentally friendly workspaces. FSC and OSHPD certified components are also available as specified by a designer.

Our approach to sustainability is in line with everything else that we do at HAMILTON. We are deeply committed to delivering to your project's needs and providing the perfect fit, every time. For many clients, a comprehensive solution means pursuing green initiatives.

We embrace the sustainability concerns that our clients bring to us by:

• Conducting the research necessary to find goods currently available on the market that are compliant
We are casework experts. We are always on the lookout for innovative new materials in our area of specialty.

• Partnering with clients to form a strategy
We encourage our clients to identify and discuss their sustainability intentions with us so that we can ensure Hamilton components help them achieve their targeted goals. The earlier you involve us in the planning of your project, the more we can help.

• Brainstorming for solutions
We have tremendous practical knowledge and our design studio is located yards away from the factory floor. We can accommodate your green initiatives while maintaining the design integrity of the project.

## Sustainability Guidelines

HAMILTON will provide proper documentation for the rating system of your choice. We have extensive experience with LEED, and have obtained a Declare label for our products. We are active with current sustainability efforts in the A&D community like Environmental Product Declarations (EPD) .

• Our product is found in CSI Division 12, under 12 32 16 Manufactured Plastic-Laminate-Clad Casework and 12 35 36 Mailroom Casework.

• The HAMILTON modular casework product is an “assembly,” project specific documentation includ-ing material percentage by weight provided upon request.

• All HAMILTON products contain recycled content, and may contribute to regional credits depending on project location.

• HAMILTON products do not require adhesives or sealants to be applied on-site, and all shop applied laminating adhesives contain No Added Urea Formaldehyde (NAUF).

• HAMILTON is FSC Chain of Custody certified. Upon request, our casework products can be ordered to comply with FSC requirements.

• All HAMILTON products are GREENGUARD Gold Certified to comply with the ANSI/BIFMA standards, and can be ordered to comply with NAUF and ULEF requirements.

HAMILTON sustainability experts will provide consultation every step of the way to facilitate the success of your project.

# Limited Lifetime Warranty

Hamilton Casework Solutions ("HAMILTON") warrants to the original retail purchaser that HAMILTON Products purchased on or after January 1, 1996 will be free from defects in material and workmanship for as long as the original retail purchaser owns such HAMILTON Product, except for the following, which are warranted only as to the HAMILTON Product components of the items (HAMILTON expressly disclosing any warranty, express or implied, on hardware, electronics or other specialty components specified by a HAMILTON customer but not manufactured by HAMILTON) and for a period of three years from the date of purchase as shown on the HAMILTON Sales Order: Tack board fabric, task lights, casters, carts, adjustable keyboards and module shelf standard as well as any powder coated item. This warranty is made solely to the original retail purchaser, is non-transferable and shall be effective from the date of purchase as shown on the HAMILTON Sales Order. This warranty is void for any damages to the HAMILTON Product due to misuse, abuse, neglect, accident, improper installation, failure to comply with instructions furnished by HAMILTON or any repair or alteration performed by anyone other than HAMILTON or an authorized HAMILTON dealer. Damage caused by common carrier during shipment is not included in this warranty.

THIS FOREGOING WARRANTY IS IN LIEU OF, AND HAMILTON EXPRESSLY DISCLAIMS ALL OTHER, WARRANTIES OF ANY KIND, EXPRESS OR IMPLIED. IN NO EVENT SHALL HAMILTON BE LIABLE TO ANY RETAIL PURCHASER OR USER OF HAMILTON PRODUCTS OR ANY THIRD PARTY FOR CONSEQUENTIAL, INDIRECT, INCIDENTAL, SPECIAL, EXEMPLARY, PUNITIVE OR ENHANCED DAMAGES, LOST PROFITS OR REVENUES OR DIMINUTION IN VALUE ARISING OUT OF THE PURCHASE, SALE OR USE OF HAMILTON PRODUCTS, REGARDLESS OF WHETHER SUCH DAMAGES WERE FORSEEABLE, WHETHER OR NOT HAMILTON WAS ADVISED OF THE POSSIBILITY OF SUCH DAMAGES AND THE LEGAL OR EQUITABLE THEORY ON WHICH THE CLAIM IS MADE.

Hamilton Casework Solutions offer GREENGUARD Gold certified products to provide safe, quality, environmentally friendly workspaces. FSC and OSHPD certified components are also available as specified by a designer.

3158 Production Drive
Fairfield, OH 45014
Phone: 800.503.9966
Fax: 800.503.9963
hamiltoncs.com

HAMILTON
CASEWORK SOLUTIONS